Automatic Washers

Refer to Page 3 for Model Numbers

Parts

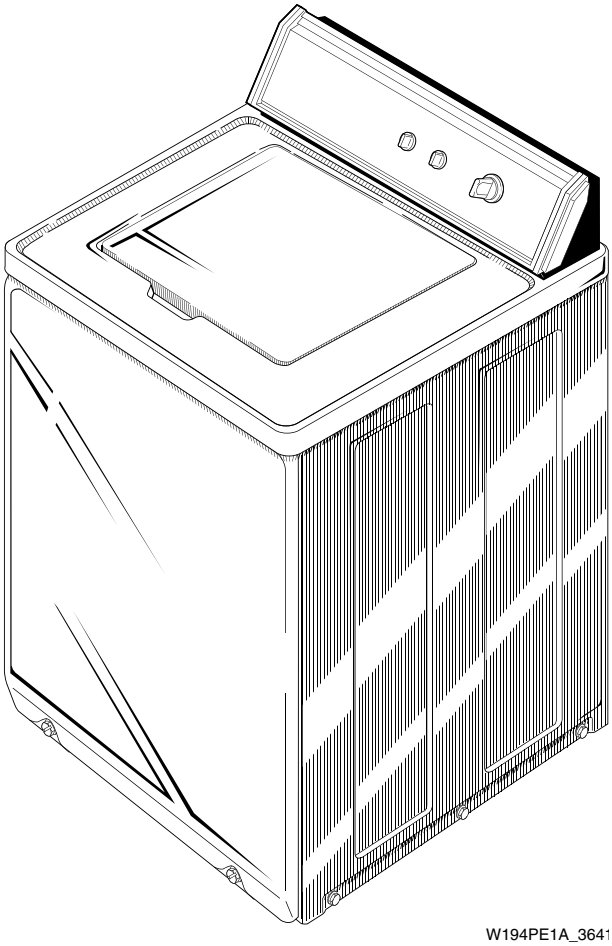

W194PE1A_3641

Alliance Laundry Systems

www.comlaundry.com

Part No. 36418R4
June 2011

Table of Contents

Title	Page
Parts Ordering Information	2
Nameplate Location	2
Model Identification	3
Timer, Case and Plate	4
Control Panel, Control Hood and Controls	6
Graphic Panel, Control Hood and Controls (Drawing 1 of 3)	8
Graphic Panel, Control Hood and Controls (Drawing 2 of 3)	10
Graphic Panel, Control Hood and Controls (Drawing 3 of 3)	12
Cabinet Top, Loading Door and Control Hood Rear Panel	14
Cabinet Top and Loading Door	16
Out-of-Balance Switch	18
Inlet Hose, Fill Hose, Mixing Valve and Mounting Bracket	20
Motor, Mounting Bracket, Belt and Pump	22
Agitator, Drive Bell, Seal Kit, Washtub and Hub	24
Outer Tub, Cover and Pressure Hose	26
Transmission Assembly and Balance Ring	28
34526P Transmission Assembly	30
Drain Hose and Siphon Break Kit	32
Bearing Housing, Brake, Pulley and Pivot Dome	34
Front Panel, Base Assembly and Cabinet Assembly	36
Mixing Valve and Motor Connection Blocks, Terminals and Terminal Extractor Tool	38
Power Cord and Terminals	40
Special Tools (Drawing 1 of 2)	42
Special Tools (Drawing 2 of 2)	44
Wire Harnesses and Wires	46
Parts Index	47

© Copyright 2011, Alliance Laundry Systems LLC

All rights reserved. No part of the contents of this book may be reproduced or transmitted in any form or by any means without the expressed written consent of the publisher.

Parts Ordering Information

If literature or replacement parts are required, contact the source from whom the machine was purchased or contact Alliance Laundry Systems at (920) 748-3950 for the name and address of the nearest authorized parts distributor.

For technical assistance, call either of the numbers listed below:

(920) 748-3121 Ripon, Wisconsin

+32 56 41 20 54 Wevelgem, Belgium

Nameplate Location

When calling or writing about your product, be sure to mention model and serial numbers. Model and serial numbers are located on nameplate(s) as shown.

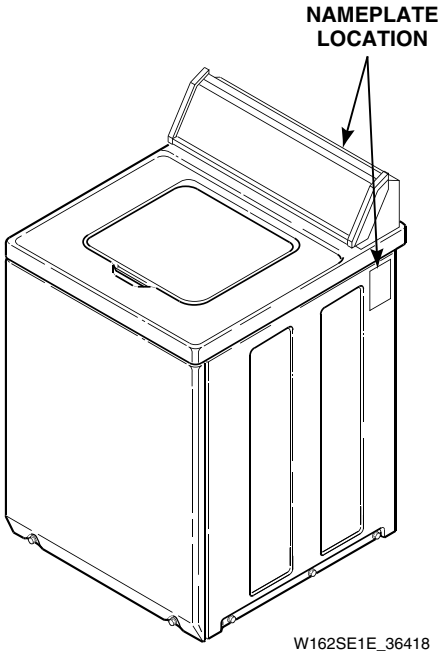

© Copyright, Alliance Laundry Systems LLC – DO NOT COPY or TRANSMIT

Model Identification

Information in this manual is applicable to these washer models:

AWG100*
AWG200*
AWG200*2
AWG202*
AWG204*2
AWG390*
AWG392*
AWM392*-1088
AWM392*21088
AWM392*-3088
AWM392*23088
AWM593*299F5
AWM593*299F7
EA2010*A3088

*** Add Letter To Designate Color. L - Almond W - White**

© Copyright, Alliance Laundry Systems LLC – DO NOT COPY or TRANSMIT

Timer, Case and Plate

Model EA2010*A3088

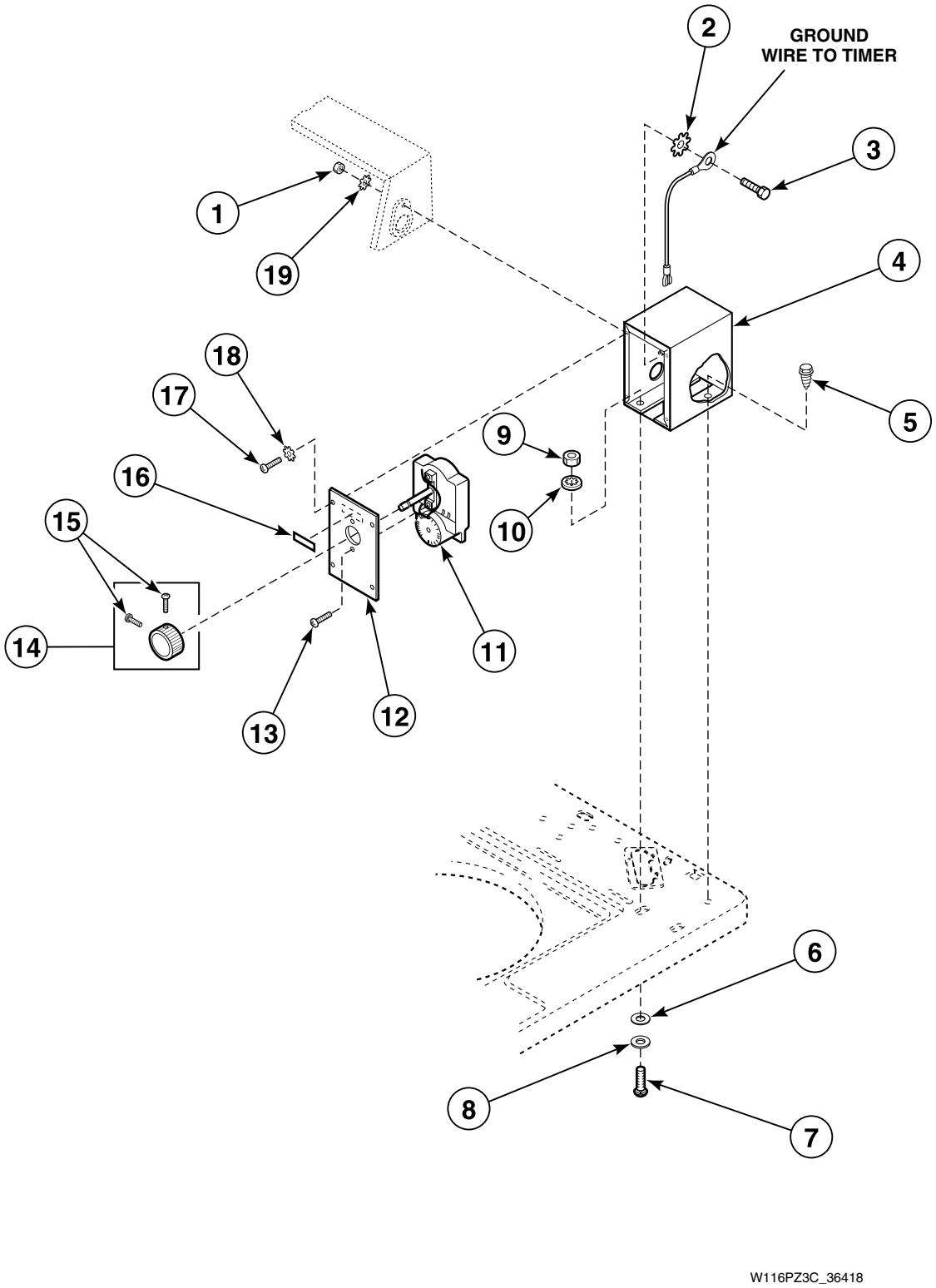

© Copyright, Alliance Laundry Systems LLC – DO NOT COPY or TRANSMIT

Timer, Case and Plate

REF	PART NO.	DESCRIPTION	COMMENTS
1	52566	Nut	
2	M400017	Washer	
3	02916	Screw	
4	37733W	Timer Case Assembly	
5	23962	Screw	
6	23225	Washer	
7	02505	Bolt	
8	30627	Washer	
9	20275	Nut	
10	21456	Washer	
11	28719P	Timer	
12	31864W	Timer Plate	
13	27328	Screw	
14	26256	Timer Knob Assembly	
15	80399	Screw	
16	53738	Push-to-Start Sticker	
17	51778	Screw	
18	21734	Washer	
19	02431	Washer	

*** Add Letter To Designate Color. L - Almond W - White**

© Copyright, Alliance Laundry Systems LLC – DO NOT COPY or TRANSMIT

Control Panel, Control Hood and Controls

Model EA2010*A3088

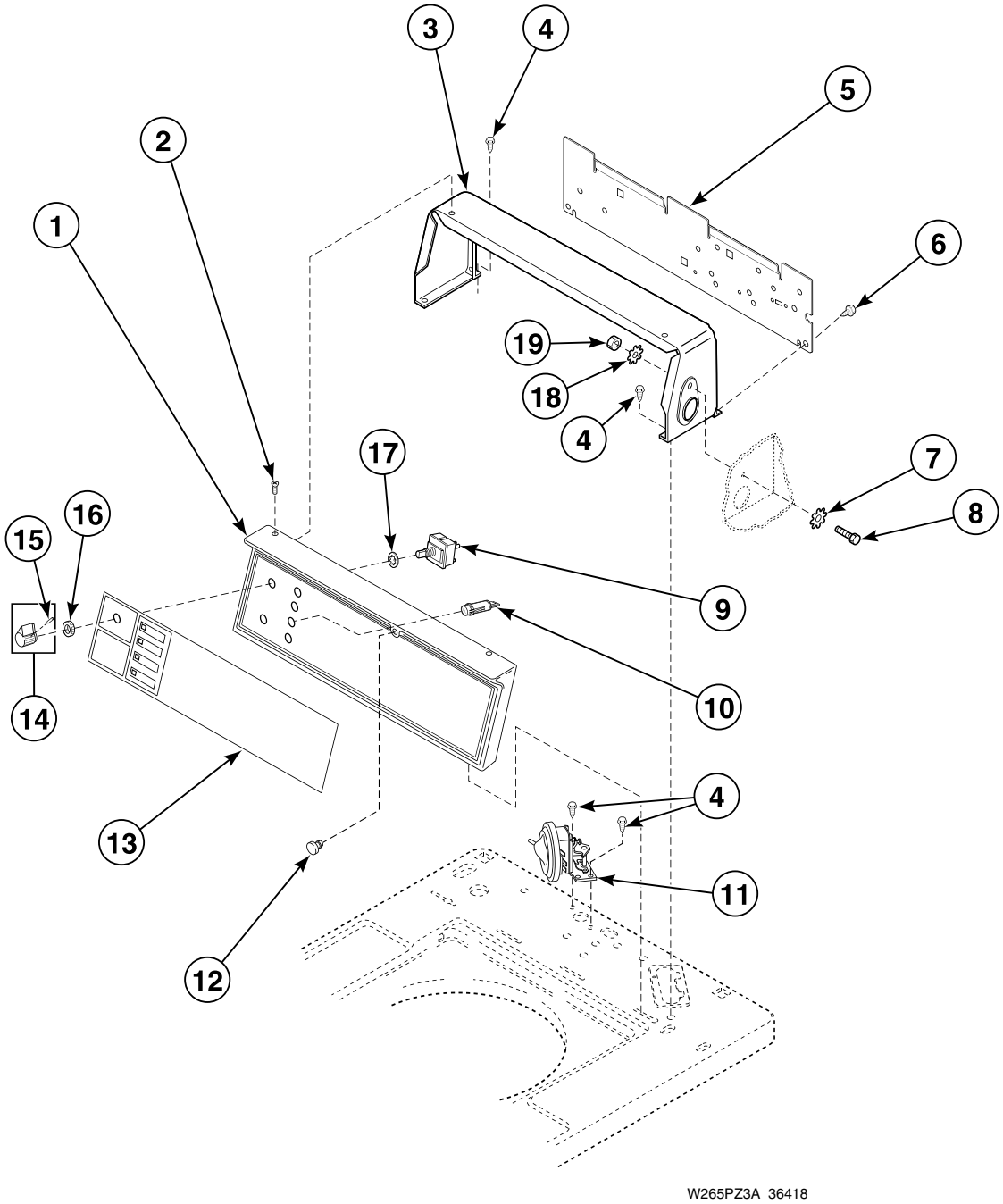

© Copyright, Alliance Laundry Systems LLC – DO NOT COPY or TRANSMIT

Control Panel, Control Hood and Controls

REF	PART NO.	DESCRIPTION	COMMENTS
1	36521*P	Control Panel and Bracket Assembly	
2	500226	Screw	Phillips Head
	35528	Screw	Torx Head; Optional, for added security; Refer to *Special Tools* section for Torx Bit and Holder
3	37075*	Control Hood	
4	23962	Screw	
5	38267	Hood Back Panel	
6	23222	Screw	
7	M400017	Washer	
8	02916	Screw	
9	27761	Switch	
10	32519	Light	
11	35889P	Pressure Switch	
12	32648	Control Panel Bumper	
13	32460	Graphic Overlay	
14	39897	Switch Knob	
15	N/A	Setscrew	
16	24205	Nut	
17	91176	Washer	
18	02431	Washer	
19	52566	Nut	

*** Add Letter To Designate Color. L - Almond W - White**

N/A = Part no longer available

© Copyright, Alliance Laundry Systems LLC – DO NOT COPY or TRANSMIT

Graphic Panel, Control Hood and Controls (Drawing 1 of 3)

Models AWG100*, AWG200*, AWG200*2, AWG202*, AWG204*2, AWG390* and AWG392*

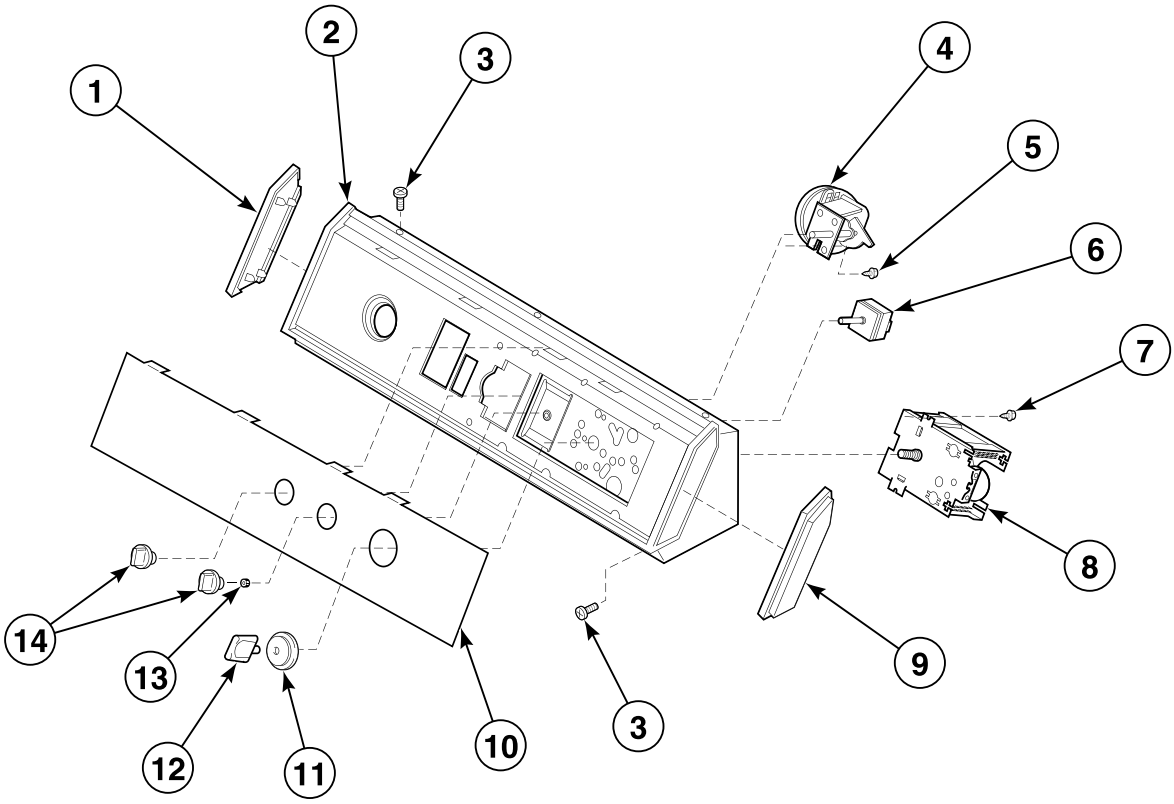

W186P_36418

© Copyright, Alliance Laundry Systems LLC – DO NOT COPY or TRANSMIT

Graphic Panel, Control Hood and Controls (Drawing 1 of 3)

REF	PART NO.	DESCRIPTION	COMMENTS
1	34460	End Cap	Left
2	31811	Hood and Mounting Bracket Assembly	Through Serial No. 9511021617
	N/A	Control Hood Assembly	Starting Serial No. 9511021618
3	31752	Screw	
4	39035P	Pressure Switch	
5	31260	Screw	
6	21300	Temperature Switch	Model AWG100*; Through Serial No. 9511021617
	35115	Temperature Switch	Model AWG100*; Starting Serial No. 9511021618
	32189	Water Temperature Switch	All other models; Through Serial No. 9511021617
	36335	Temperature Switch	All other models; Starting Serial No. 9511021618
7	23962	Screw	
8	31239P	Timer	
9	34459	End Cap	Right
10	N/A	Graphic Panel	Model AWG100*
	N/A	Graphic Panel	Models AWG200* and AWG202*
	37933	Graphic Panel	Model AWG200*2
	N/A	Graphic Panel	Model AWG204*2
	N/A	Graphic Panel	Models AWG390* and AWG392*
11	33817	Timer Skirt Assembly	
12	33897	Timer Knob	
13	57584	Nut	Through Serial No. 9511021617
14	33610	Knob Assembly	

*** Add Letter To Designate Color. L - Almond W - White**

N/A = Part no longer available

© Copyright, Alliance Laundry Systems LLC – DO NOT COPY or TRANSMIT

Graphic Panel, Control Hood and Controls (Drawing 2 of 3)

Models AWM392*-1088, AWM392*21088, AWM392*-3088 and AWM392*23088

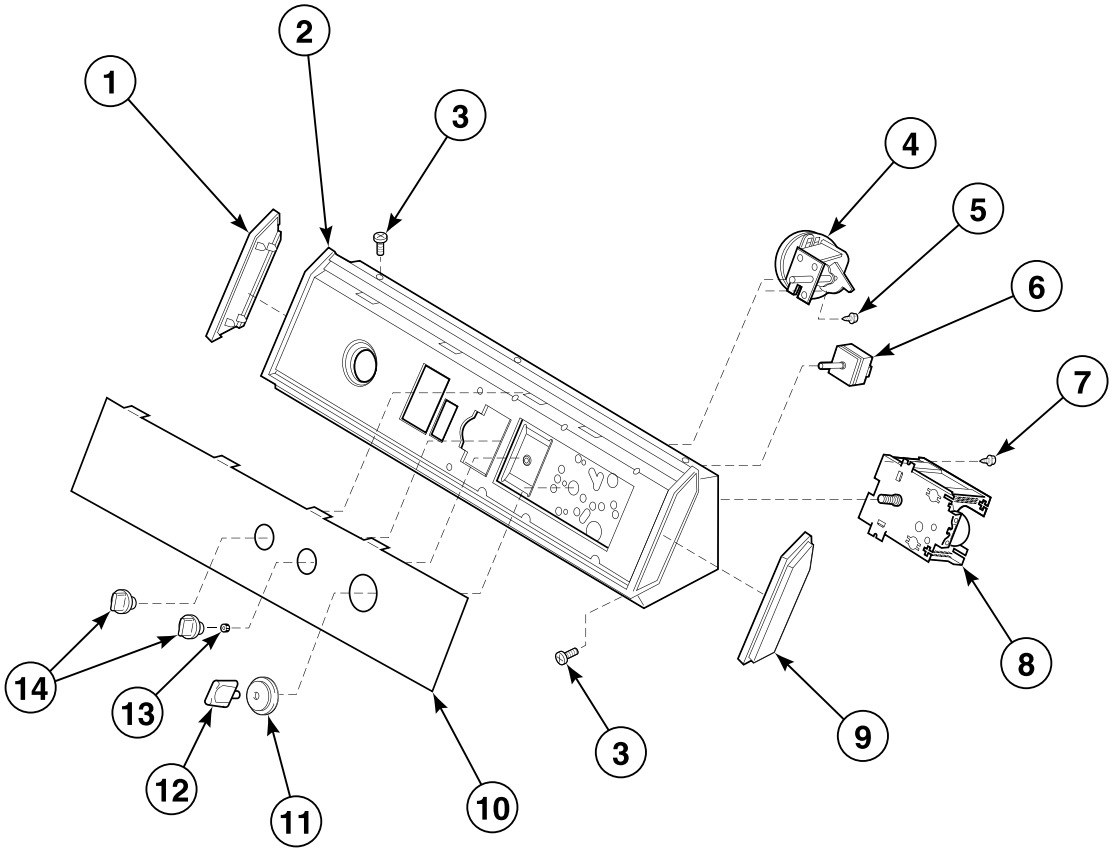

W186PA_36418

© Copyright, Alliance Laundry Systems LLC – DO NOT COPY or TRANSMIT

Graphic Panel, Control Hood and Controls (Drawing 2 of 3)

REF	PART NO.	DESCRIPTION	COMMENTS
1	31249	End Cap	Left
2	31811	Hood and Mounting Bracket Assembly	Through Serial No. 9511021617
	N/A	Control Hood Assembly	Starting Serial No. 9511021618
3	31752	Screw	
4	39035P	Pressure Switch	
5	31260	Screw	
6	21300	Temperature Switch	Through Serial No. 9511021617
	35115	Temperature Switch	Starting Serial No. 9511021618
7	23962	Screw	
8	31243P	Timer	Models AWM392*-1088 and AWM392*21088
	31241P	Timer	Models AWM392*-3088 and AWM392*23088
9	31248	End Cap	Right
10	35235	Graphic Panel	Models AWM392*-1088 and AWM392*-3088
	36620	Graphic Panel	Models AWM392*21088 and AWM392*23088
11	33817	Timer Skirt Assembly	
12	33897	Timer Knob	
13	57584	Nut	Through Serial No. 9511021617
14	33610	Knob Assembly	

*** Add Letter To Designate Color. L - Almond W - White**

N/A = Part no longer available

© Copyright, Alliance Laundry Systems LLC – DO NOT COPY or TRANSMIT

Graphic Panel, Control Hood and Controls (Drawing 3 of 3)

Models AWM593*299F5 and AWM593*299F7

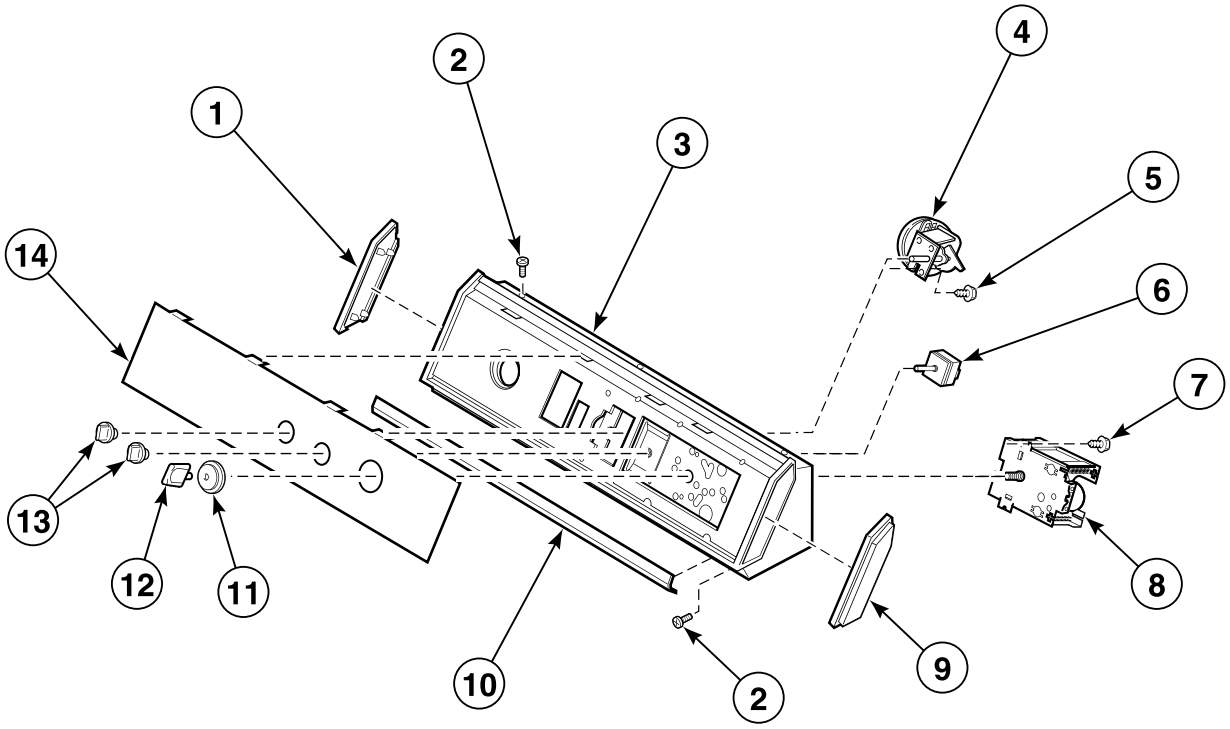

W405PZ3A_36418

© Copyright, Alliance Laundry Systems LLC – DO NOT COPY or TRANSMIT

Graphic Panel, Control Hood and Controls (Drawing 3 of 3)

REF	PART NO.	DESCRIPTION	COMMENTS
1	31249	End Cap	Left
2	31752	Screw	
3	N/A	Control Hood Assembly	
4	201927P	Pressure Switch	
5	31260	Screw	
6	36335	Temperature Switch	
7	23962	Screw	
8	36608P	Timer	
9	31248	End Cap	Right
10	33123R	Trim	
11	33817	Timer Skirt Assembly	
12	33897	Timer Knob	
13	33610	Knob Assembly	
14	N/A	Graphic Panel	

*** Add Letter To Designate Color. L - Almond W - White**

N/A = Part no longer available

© Copyright, Alliance Laundry Systems LLC – DO NOT COPY or TRANSMIT

Cabinet Top, Loading Door and Control Hood Rear Panel

All Models Except EA2010*A3088

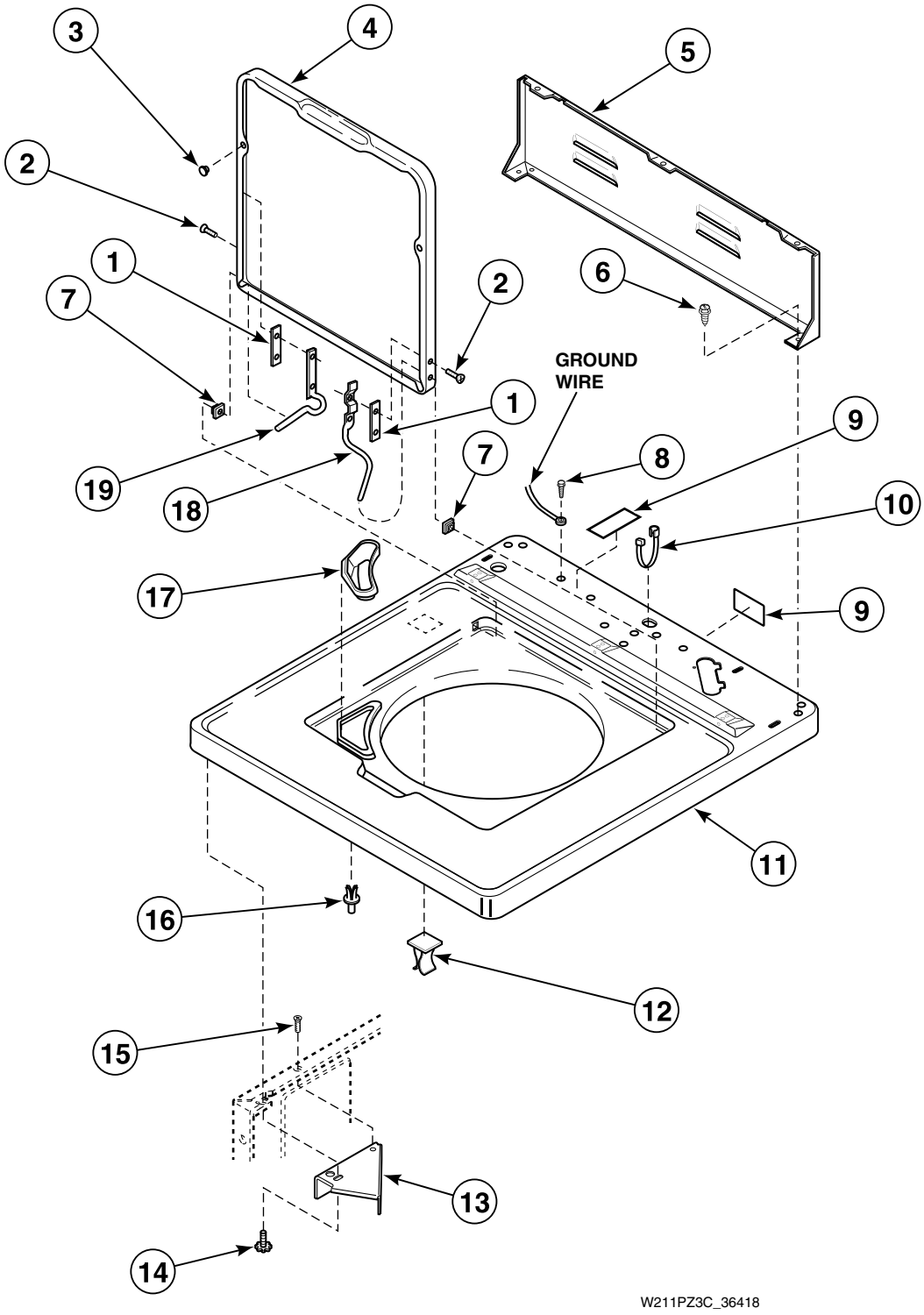

© Copyright, Alliance Laundry Systems LLC – DO NOT COPY or TRANSMIT

Cabinet Top, Loading Door and Control Hood Rear Panel

REF	PART NO.	DESCRIPTION	COMMENTS
1	34338	Hinge Gasket	
2	34337	Screw	
3	21685	Bumper	
4	33541*P	Lid	
5	37782	Hood Back Panel	
6	23962	Screw	
7	33446	Bushing	
8	52909	Screw	
9	505281	Disconnect Power Warning Label	
10	38384	Strain Relief	
11	34902*P	Top Assembly	
12	36519	Hinge Stop Clip	Models AWG100*, AWG200*2, AWG202*, AWG204*2, AWG390*, AWG392*, AWM593*299F5 and AWM593*299F7
13	36034	Director Bracket	
14	33562	Screw	
15	N/A	Screw	
16	56534	Support Barrel	
17	34776	Bleach Dispenser	All models except AWG100*, AWG200* and AWG200*2
18	36437	Lid Hinge	Right
19	36513	Lid Hinge	Left; Models AWG100*, AWG200*, AWG200*2, AWG202*, AWG204*2, AWG390*, AWG392*, AWM593*299F5 and AWM593*299F7
	36438	Lid Hinge	Left; All other models

*** Add Letter To Designate Color. L - Almond W - White**

N/A = Part no longer available

© Copyright, Alliance Laundry Systems LLC – DO NOT COPY or TRANSMIT

Cabinet Top and Loading Door

Model EA2010*A3088

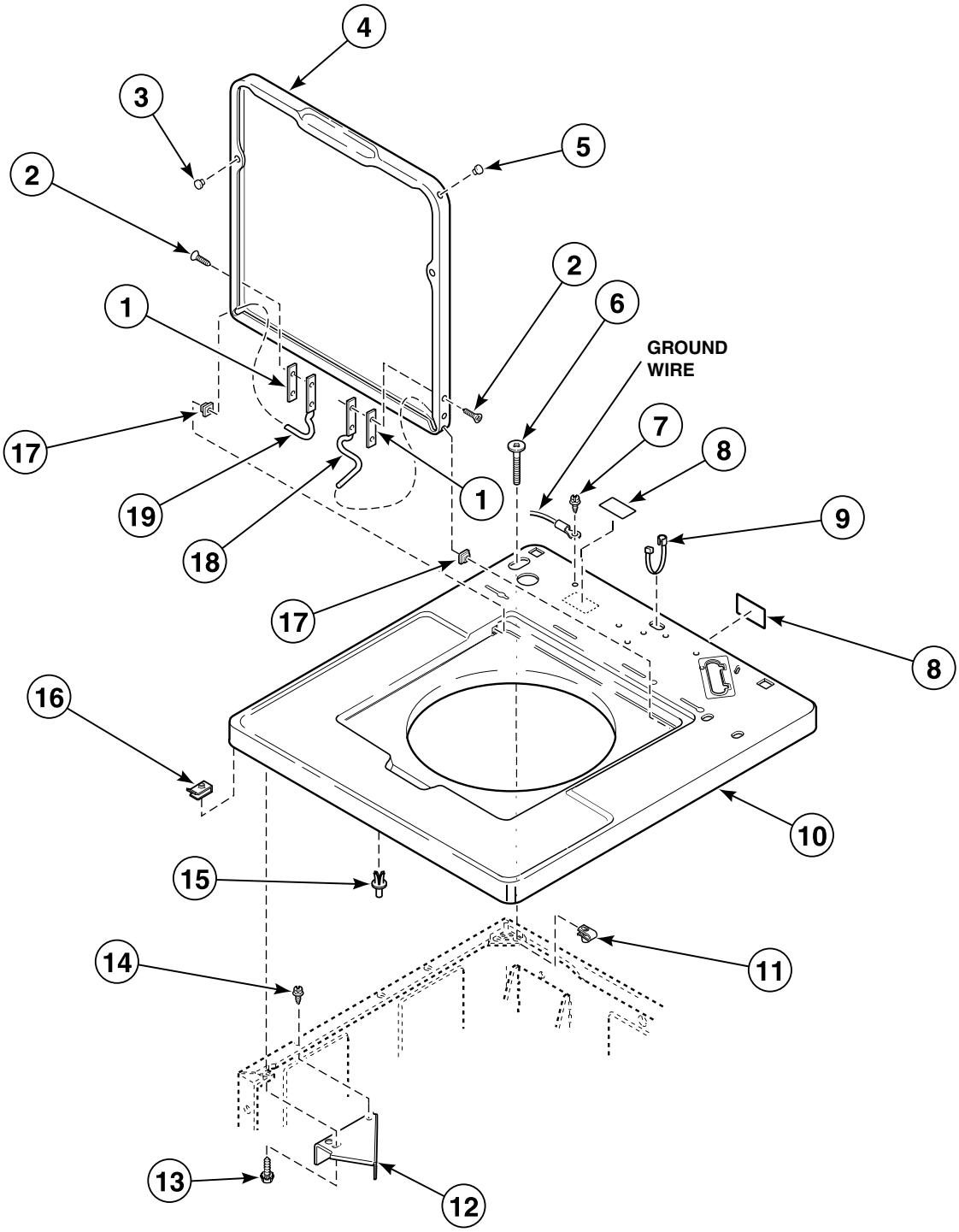

W406PZ3A_36418

© Copyright, Alliance Laundry Systems LLC – DO NOT COPY or TRANSMIT

Cabinet Top and Loading Door

REF	PART NO.	DESCRIPTION	COMMENTS
1	34338	Hinge Gasket	
2	34337	Screw	
3	21685	Bumper	
4	201460*P	Lid	Porcelain
5	34153	Lid Plug	
6	503673	Screw	
7	52909	Screw	
8	505281	Disconnect Power Warning Label	
9	38384	Strain Relief	
10	36273*P	Top Assembly	Porcelain
11	27222	Nut	Optional; For added security
12	36034	Director Bracket	
13	23008	Screw	
14	N/A	Screw	
15	56534	Support Barrel	
16	36020	Nut	
17	36474	Hinge Bushing	
18	36437	Lid Hinge	Right
19	36438	Lid Hinge	Left

*** Add Letter To Designate Color. L - Almond W - White**

N/A = Part no longer available

© Copyright, Alliance Laundry Systems LLC – DO NOT COPY or TRANSMIT

Out-of-Balance Switch

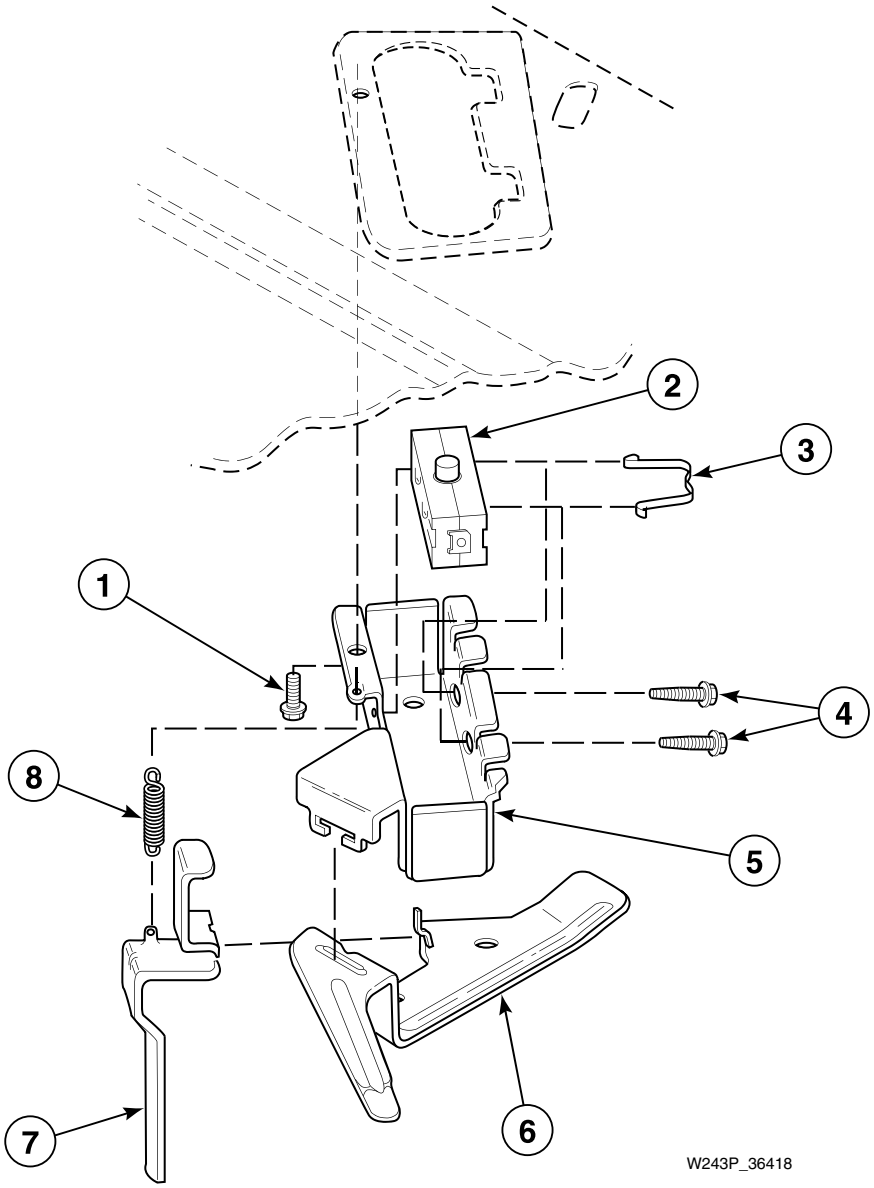

© Copyright, Alliance Laundry Systems LLC – DO NOT COPY or TRANSMIT

Out-of-Balance Switch

REF	PART NO.	DESCRIPTION	COMMENTS
1	23962	Screw	
2	33445	Switch	
3	33433	Switch Holder Clip	For Models using 33440 Switch Holder
4	36510	Screw	For Models using 36497P Switch Holder Kit
5	36497P	Switch Holder Kit	Replaces 33440 Switch Holder
6	33441	Actuator Arm	
7	33442	Unbalanced Load Lever	
8	33443	Spring	

© Copyright, Alliance Laundry Systems LLC – DO NOT COPY or TRANSMIT

Inlet Hose, Fill Hose, Mixing Valve and Mounting Bracket

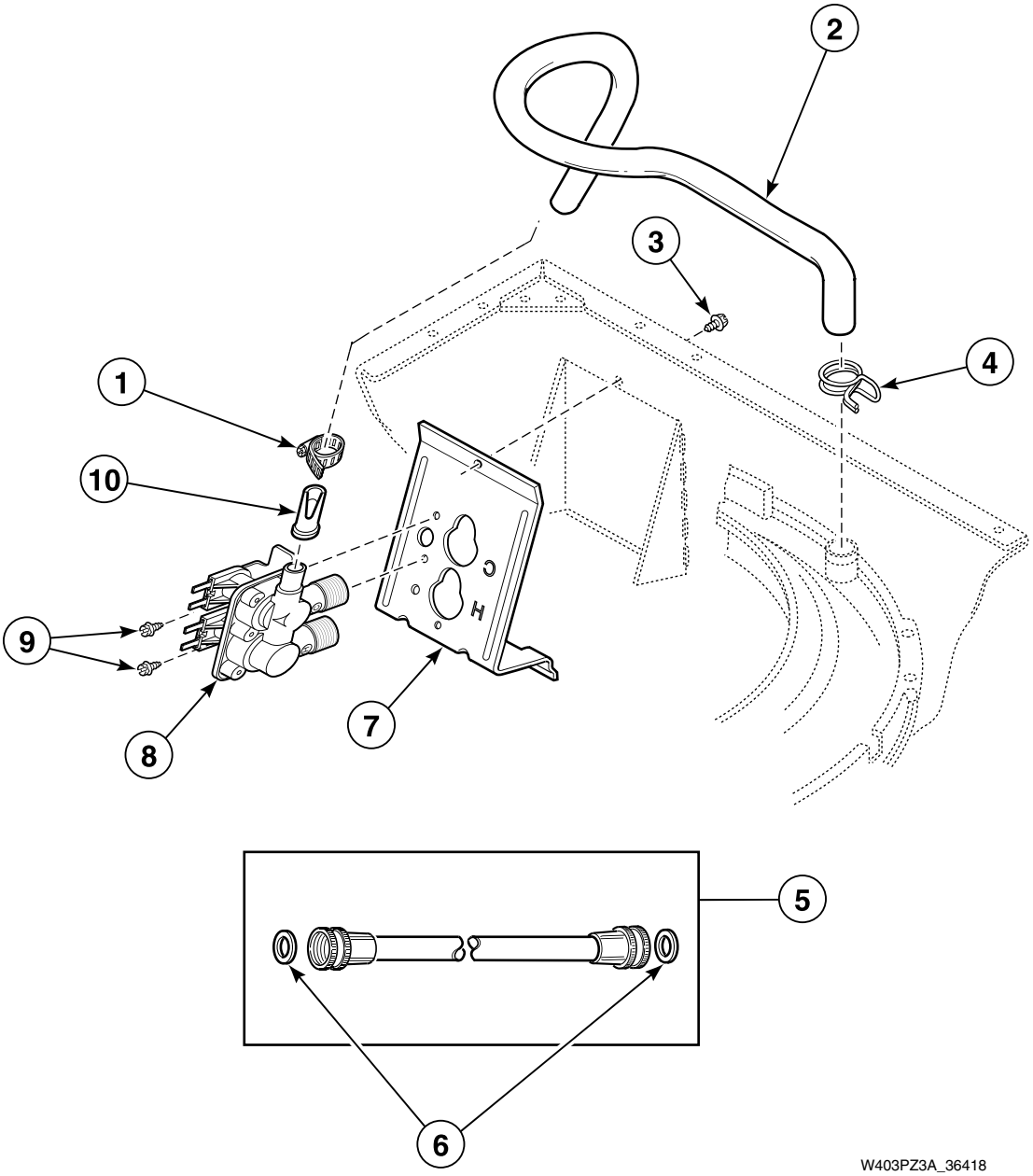

© Copyright, Alliance Laundry Systems LLC – DO NOT COPY or TRANSMIT

Inlet Hose, Fill Hose, Mixing Valve and Mounting Bracket

REF	PART NO.	DESCRIPTION	COMMENTS
1	36801	Hose Clamp	
2	38155	Mixing Valve-to-Tub Cover Hose	
3	33562	Screw	
4	29210	Hose Clamp	Gold Color
5	28330P	Fill Hose Kit	60 Hertz; 4 Foot
	38349P	Fill Hose Kit	50 Hertz; 4 Foot
	37380	Fill Hose	50 Hertz; 8 Foot
	37381	Fill Hose	50 Hertz; 10 Foot
6	20290	Washer	
7	39407	Mixing Valve Mounting Bracket	
8	34997P	Mixing Valve	Models AWM392*-3088, AWM392*23088 and EA2010*23088
	34963P	Mixing Valve	All other models
9	23962	Screw	
10	34500	Backflow Preventer	

*** Add Letter To Designate Color. L - Almond W - White**

© Copyright, Alliance Laundry Systems LLC – DO NOT COPY or TRANSMIT

Motor, Mounting Bracket, Belt and Pump

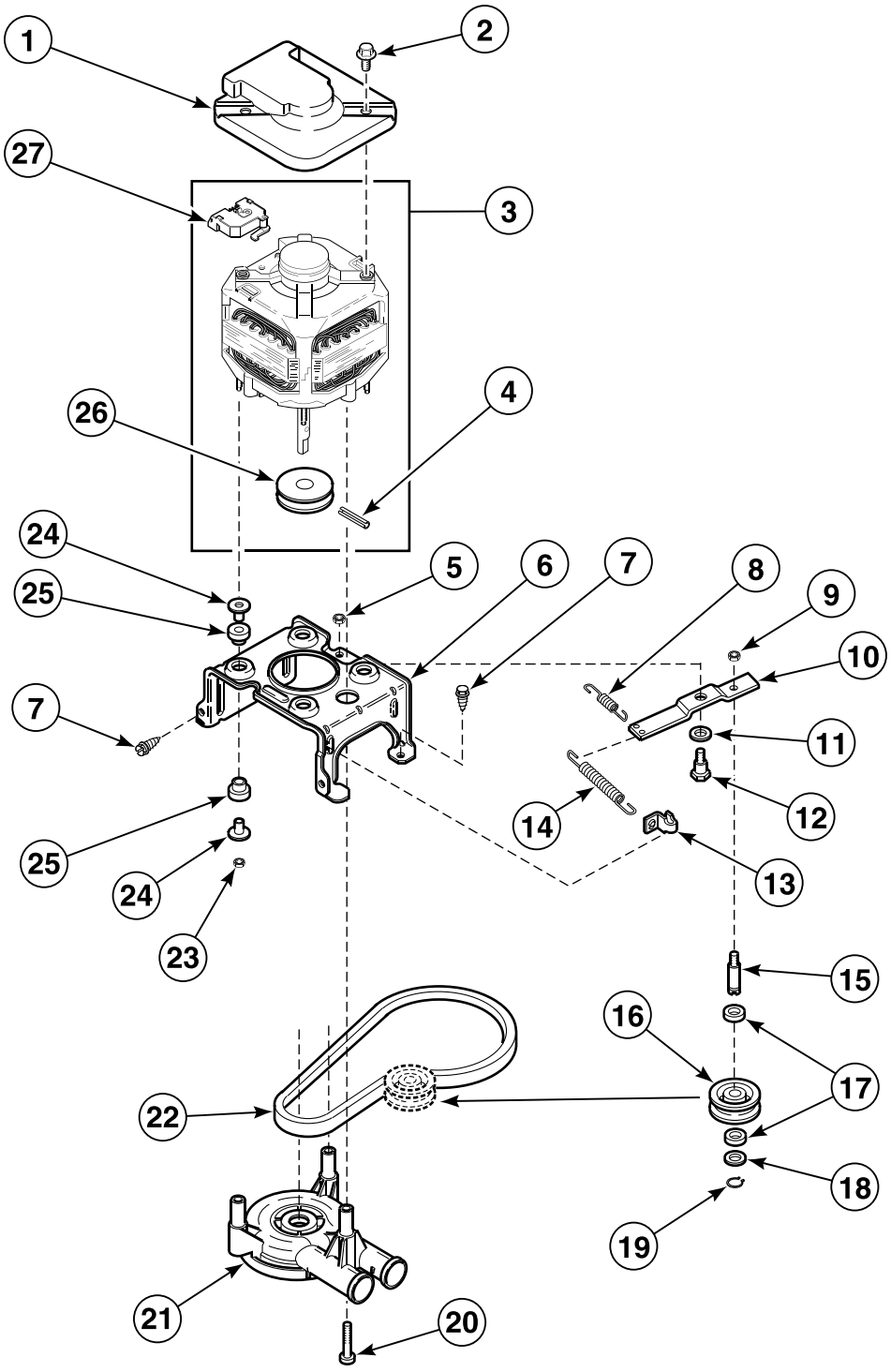

W241PZ3B_36418

© Copyright, Alliance Laundry Systems LLC – DO NOT COPY or TRANSMIT

Motor, Mounting Bracket, Belt and Pump

REF	PART NO.	DESCRIPTION	COMMENTS
	258P3	Capacitor Kit	For use in areas where low voltage exists
1	34754	Motor Shield	
2	36639	Screw	Attachment Varies by Model
	N/A	Palnut	Attachment Varies by Model
3	36256P	Motor Assembly	120 Volt, 50 Hertz, 1 Speed
	35030P	Motor Assembly	240 Volt, 50/60 Hertz, 1 Speed
	38036P	Motor Kit	115 Volt, 60 Hertz, 1 Speed
	201615P	Motor Kit	115 Volt, 60 Hertz, 2 Speed
4	N/A	Roll Pin	
5	52566	Nut	
6	N/A	Motor Mounting Bracket	Through Serial No. 9502022146
	37415P	Motor Bracket and Idler Lever Kit	Starting Serial No. 9502022147
7	503661	Screw	
8	30620	Idler Lever Helper Spring	Used through Serial No. 9506091526
9	28803	Nut	
10	31054	Idler Lever	Through Serial No. 9507005924
	37443	Idler Lever	Starting Serial No. 9507005925
11	81392	Washer	
12	27229	Screw	
13	28849	Spring Clip	
14	37366	Idler Spring	Through Serial No. 9507005924
	37606	Idler Lever Spring	Starting Serial No. 9507005925
15	28802P	Idler Shaft	
16	28800P	Idler Pulley	
17	29443	Washer	Felt
18	52549	Washer	Nylatron
19	23748	Retaining Ring	
20	34565	Screw	
21	201566P	Pump	
22	28808	Belt	Agitate and Spin; 60 Hertz Models
	35517	Belt	Agitate and Spin; 50 Hertz Models
23	35423	Nut	
24	34791	Motor Mount Post	
25	34788	Motor Mount	Rubber
26	N/A	Motor Pulley	Gold Color
27	35632	Motor Switch	

N/A = Part no longer available

© Copyright, Alliance Laundry Systems LLC – DO NOT COPY or TRANSMIT

Agitator, Drive Bell, Seal Kit, Washtub and Hub

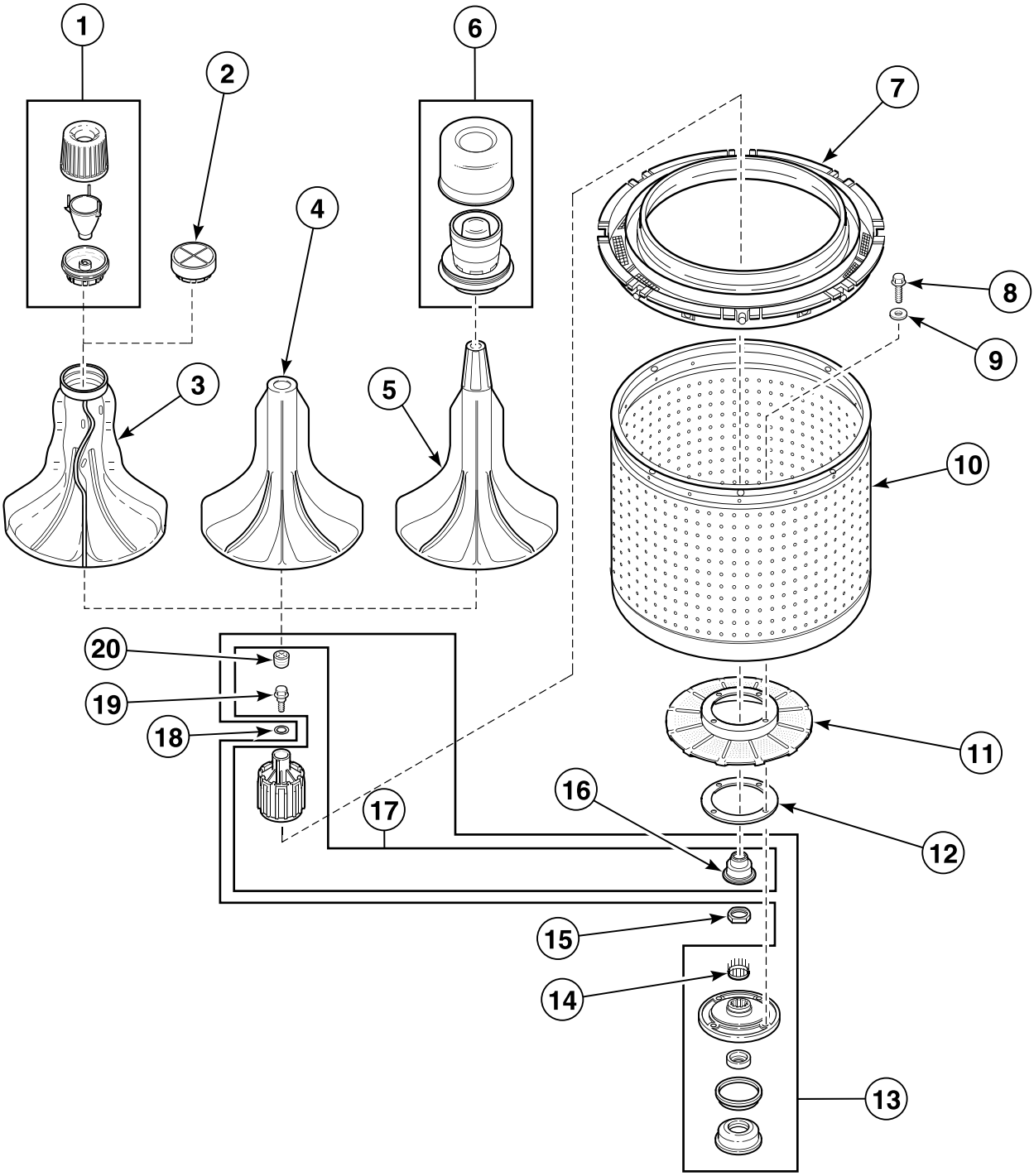

W407PZ3A_36418

© Copyright, Alliance Laundry Systems LLC – DO NOT COPY or TRANSMIT

Agitator, Drive Bell, Seal Kit, Washtub and Hub

REF	PART NO.	DESCRIPTION	COMMENTS
1	36542	Fabric Softener Dispenser Assembly	Model AWM593*299F7
2	36515	Agitator Cap	Model AWM593*299F5
3	33174	Agitator	Model AWM593*299F5
4	33513	Agitator	Model EA2010*A3088
5	33514	Agitator	All other models
6	33510	Fabric Softener Dispenser Assembly	
7	35035	Clothes Guard	
8	27202	Screw	
9	28094	Washer	
10	719P3	Washtub Kit	Stainless Steel; Models AWM593*299F5 and AWM593*299F7
	N/A	Washtub	Blue Porcelain; Model AWG204*2
	39252P	Tub Assembly	Blue Porcelain; Models AWG100*, AWG200* and AWG200*2
	39240P	Tub Assembly	White Porcelain; All other models
11	39371	Lint Filter	All Models not using 39122 Gasket
12	39122	Washtub Gasket	Models AWG100*, AWG200*, AWG200*2 and EA2010*A3088
13	495P3	Hub and Seal Kit	Includes 29728 Insert, 32857 Cover Gasket and items 14 and 17
14	29728	Spline Insert	
15	29220	Nut	
16	36425	Bell and Transmission Tube Seal	
17	39508P	Drive Bell and Seal Kit	Includes items 16, 17, 19 and 20; Replaces 30071, 34504, 36527 and 36443 Drive Bells
18	36472	O-Ring	Used with 30071, 34504, 36527 and 36443 Drive Bells only
19	39432	Screw	
20	36511	Bell Plug	

*** Add Letter To Designate Color. L - Almond W - White**

N/A = Part no longer available

© Copyright, Alliance Laundry Systems LLC – DO NOT COPY or TRANSMIT

Outer Tub, Cover and Pressure Hose

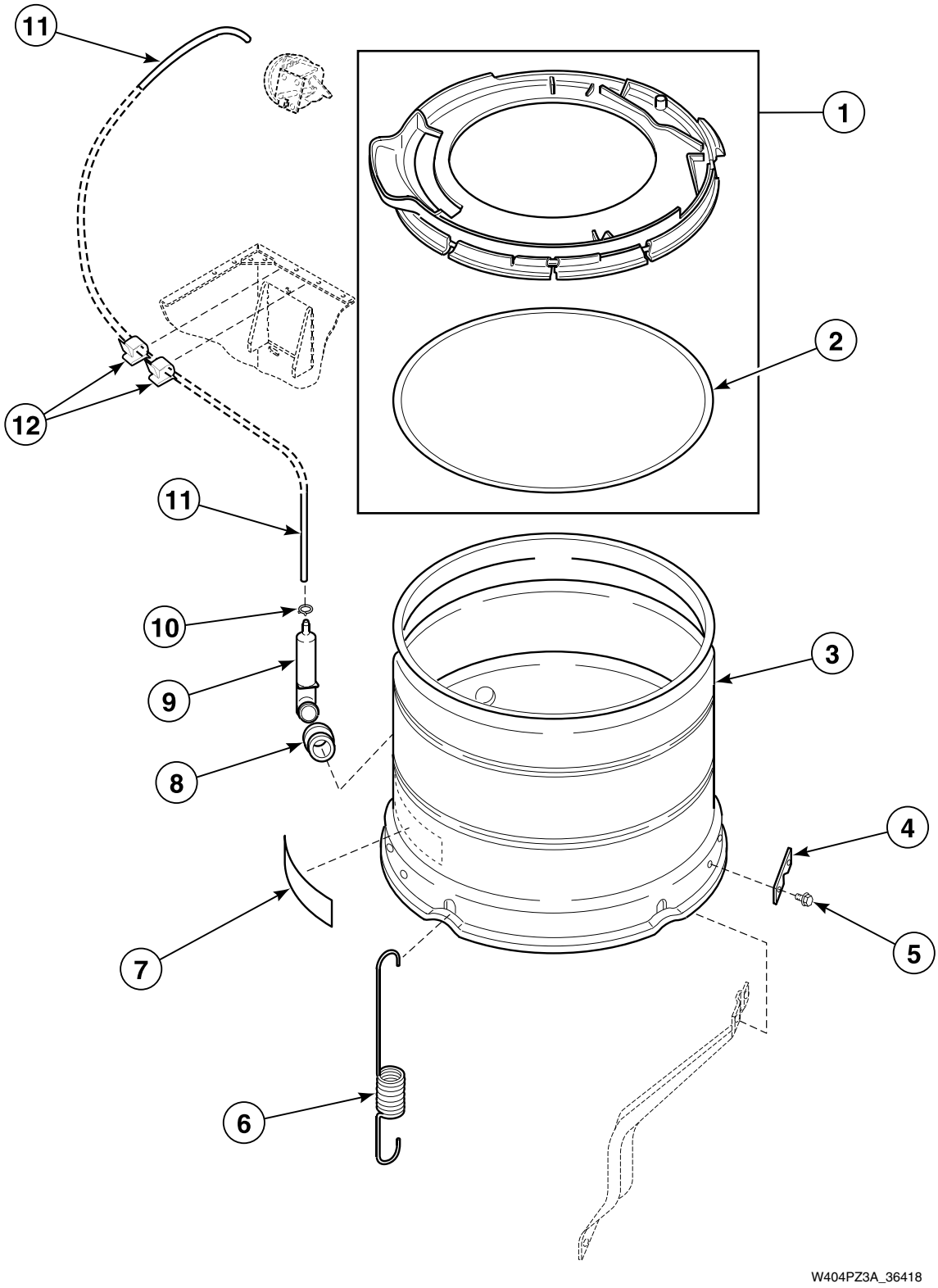

© Copyright, Alliance Laundry Systems LLC – DO NOT COPY or TRANSMIT

Outer Tub, Cover and Pressure Hose

REF	PART NO.	DESCRIPTION	COMMENTS
1	36025P	Tub Cover Kit	Includes Item 2
2	32857	Tub Cover Gasket	
3	34439P	Outer Tub Kit	Models AWG100*, AWG200*, AWG200*2 and EA2010*A3088
	34438P	Outer Tub Assembly	All other models
4	27926	Leg Plate	
5	35369	Screw	
6	35947	Tub Spring	Models AWG100*, AWG200*, AWG200*2 and EA2010*A3088
	35948	Leg Spring	All other models
7	500049	Warning Label	
8	29175	Grommet	
9	30907	Pressure Bulb	
10	39282	Hose Clamp	
11	39124	Tubing	Model EA2010*A3088
	39125	Tubing	All other models
12	21036	Cable Clip	

*** Add Letter To Designate Color. L - Almond W - White**

© Copyright, Alliance Laundry Systems LLC – DO NOT COPY or TRANSMIT

Transmission Assembly and Balance Ring

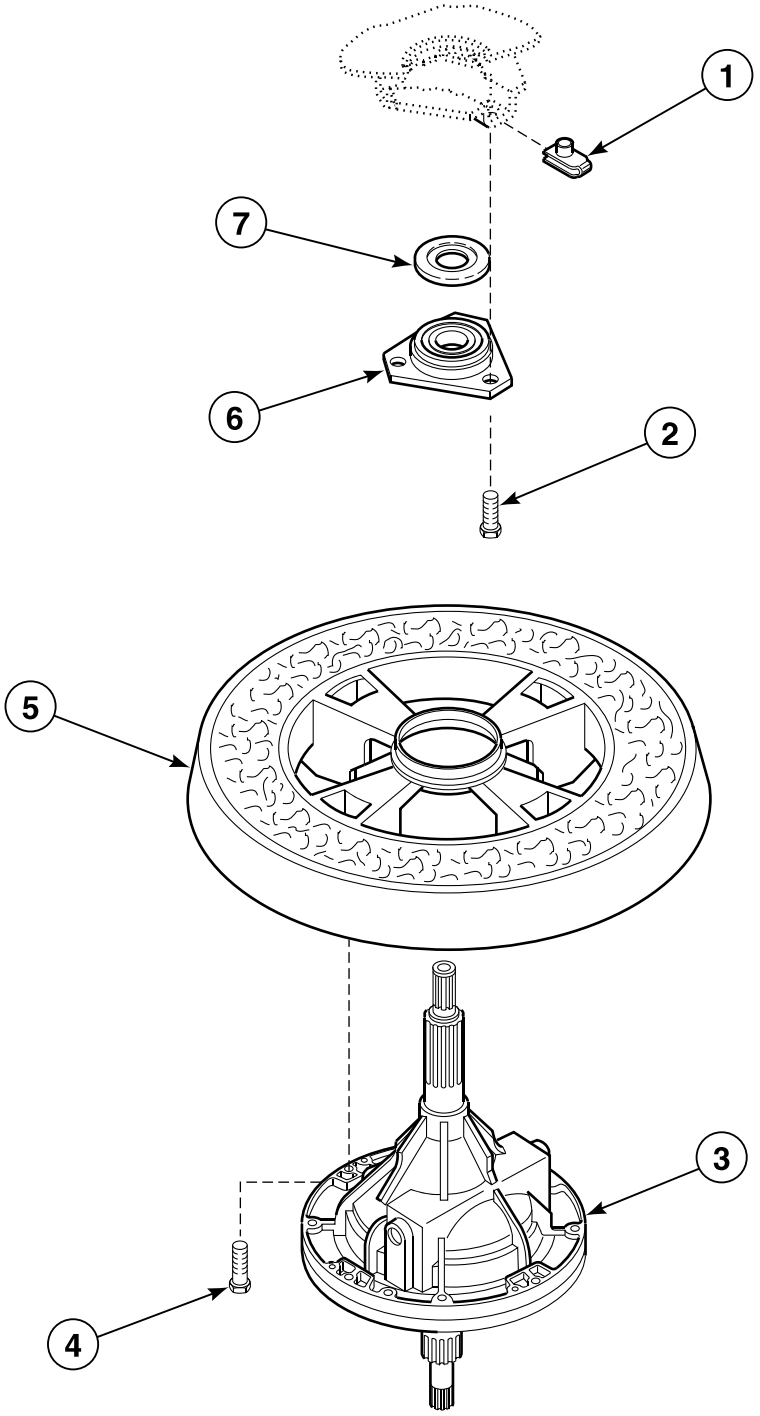

W234PZ3C_36418

© Copyright, Alliance Laundry Systems LLC – DO NOT COPY or TRANSMIT

Transmission Assembly and Balance Ring

REF	PART NO.	DESCRIPTION	COMMENTS
	27604P	Anti-Seize Compound	Apply to smooth area of both the upper and lower transmission tubes
1	27222	Nut	
2	M400057	Screw	
3	34526P	Transmission Assembly	Refer to *Transmission Assembly* section for component parts
4	N/A	Cap Screw	
5	34731	Balance Ring Assembly	
6	27182	Bearing Housing Assembly	
7	27187	Flinger	Used through Serial No. 9510053576

N/A = Part no longer available

© Copyright, Alliance Laundry Systems LLC – DO NOT COPY or TRANSMIT

34526P Transmission Assembly

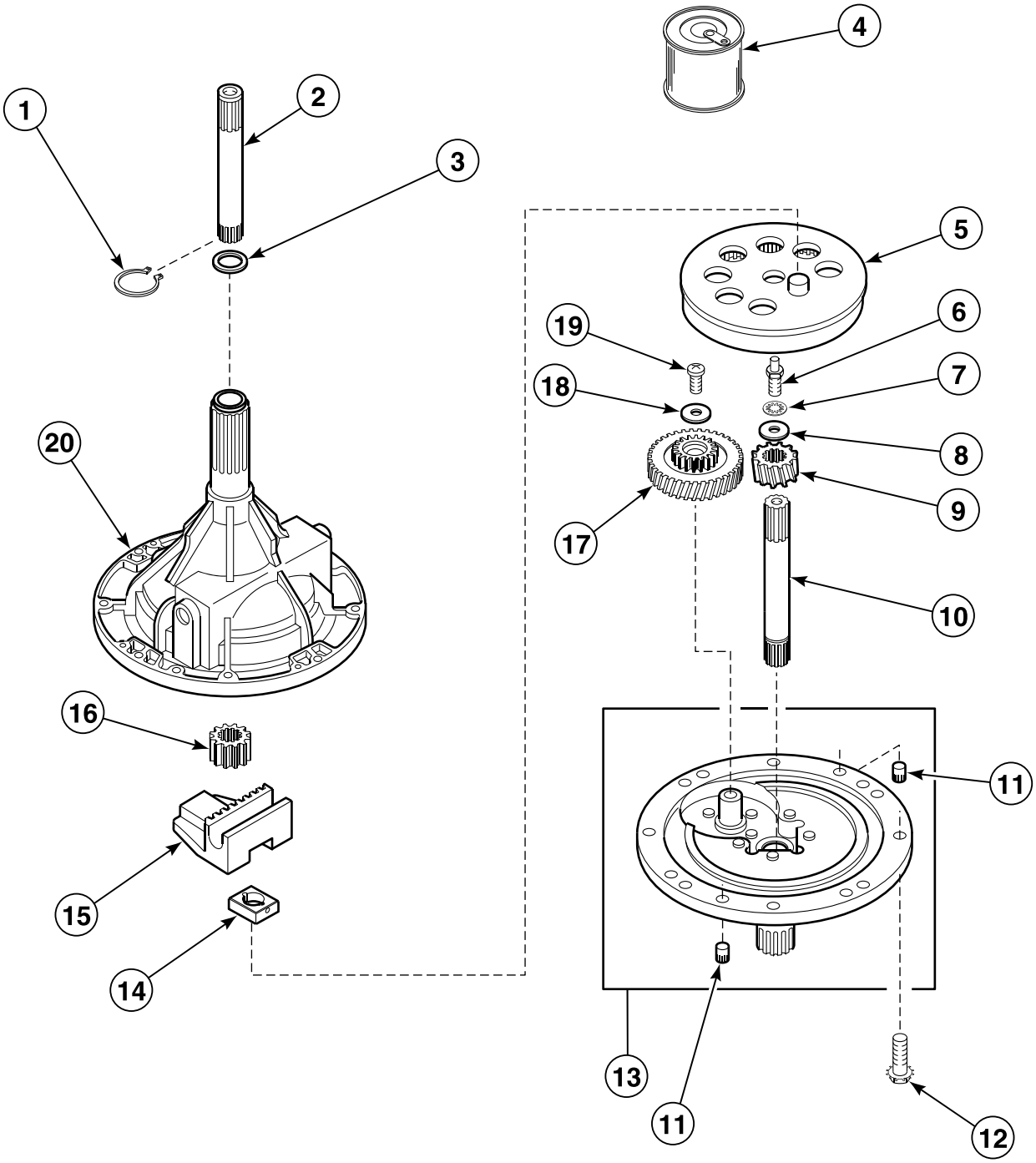

W157P_36418

© Copyright, Alliance Laundry Systems LLC – DO NOT COPY or TRANSMIT

34526P Transmission Assembly

REF	PART NO.	DESCRIPTION	COMMENTS
	37577P	Transmission Sealant	Use between Transmission Case and Cover
1	27197	Retaining Ring	
2	36570P	Output Shaft	
3	35092	Washer	
4	27243P	Transmission Oil	1 Fill
5	26577	Gear and Stud Assembly	
6	27030	Screw	
7	21456	Washer	Used through Serial No. 9712011370
8	26509	Washer	
9	36562P	Drive Pinion	
10	34853P	Input Shaft	
11	27172	Dowel Pin	Used through Serial No. 9404069378
12	32814	Screw	
13	38290P	Transmission Cover Assembly	
14	26493	Slide	
15	201664	Rack	
16	27003	Agitator Pinion	
17	29161P	Reduction Gear	
18	29260	Washer	
19	29273	Screw	
20	33223P	Transmission Case Assembly	

© Copyright, Alliance Laundry Systems LLC – DO NOT COPY or TRANSMIT

Drain Hose and Siphon Break Kit

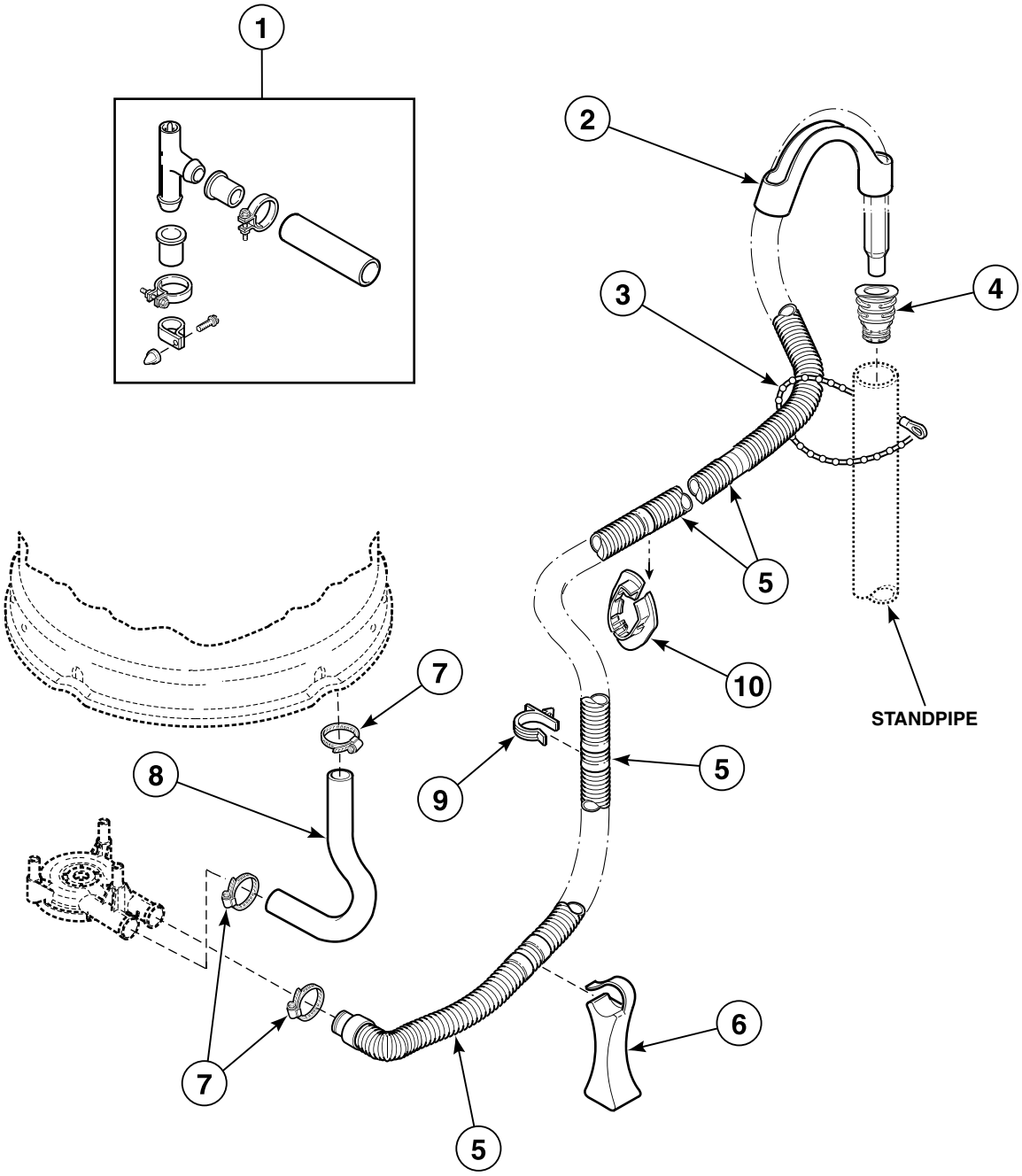

W408P_36418

© Copyright, Alliance Laundry Systems LLC – DO NOT COPY or TRANSMIT

Drain Hose and Siphon Break Kit

REF	PART NO.	DESCRIPTION	COMMENTS
	451P3	Drain Extension Kit	Use with No. 20616 Drain Hose; Order by the foot, as required.
1	562P3	Siphon Break Kit	Siphon break kit MUST be installed in drain hose if drain receptacle is lower than cabinet top of washer
2	33615	Drain Hose Sleeve	
3	33489	Standpipe Strap	
4	36878	Standpipe Adapter	
5	39950	Drain Hose	
6	35487	Hose Support	Through Serial No. 9502022146
	36522	Hose Support	Starting Serial No. 9502022147
7	36802	Hose Clamp	
8	35752	Tub-to-Pump Hose	Models AWG100*, AWG200* and AWG200*2
	35753	Tub-to-Pump Hose	All other models
9	36014	Retainer Clip	
10	32219	Strain Relief	

*** Add Letter To Designate Color. L - Almond W - White**

© Copyright, Alliance Laundry Systems LLC – DO NOT COPY or TRANSMIT

Bearing Housing, Brake, Pulley and Pivot Dome

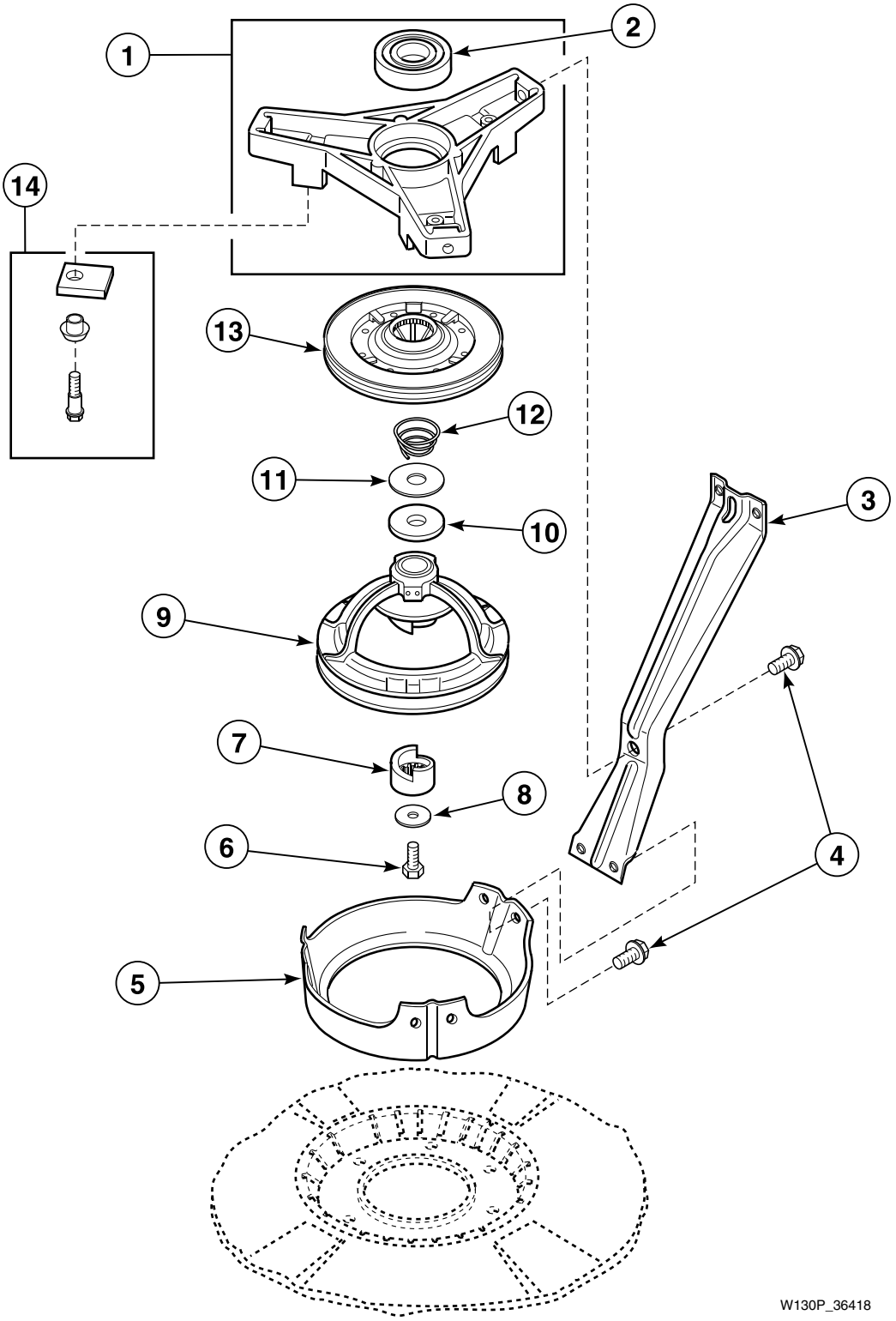

© Copyright, Alliance Laundry Systems LLC – DO NOT COPY or TRANSMIT

Bearing Housing, Brake, Pulley and Pivot Dome

REF	PART NO.	DESCRIPTION	COMMENTS
	26594P	Silicone Grease	Apply small amount to each new brake pad
1	35746	Bearing Housing Assembly	
2	28944RP	Upper or Lower Bearing	
3	34792	Support Leg	Models AWG100*, AWG200*, AWG200*2 and EA2010*A3088
	N/A	Support Leg	All other models
4	35369	Screw	
5	34470	Pivot Dome	
6	27220	Screw	
7	27018	Helix	
8	26509	Washer	
9	34923	Pulley Assembly	Models AWG100*, AWG200* and AWG200*2
	34921	Pulley Assembly	Models AWG202* and AWG204*2
	35310	Pulley Assembly	Model EA2010*A3088
	35308	Pulley Assembly	All other models
10	27015	Washer	Thick
11	35535	Washer	Thin
12	33435	Spring	
13	38505P	Brake Kit	
14	548P3	Brake Pad Kit	Includes three pads, sleeves and screws

*** Add Letter To Designate Color. L - Almond W - White**

N/A = Part no longer available

© Copyright, Alliance Laundry Systems LLC – DO NOT COPY or TRANSMIT

Front Panel, Base Assembly and Cabinet Assembly

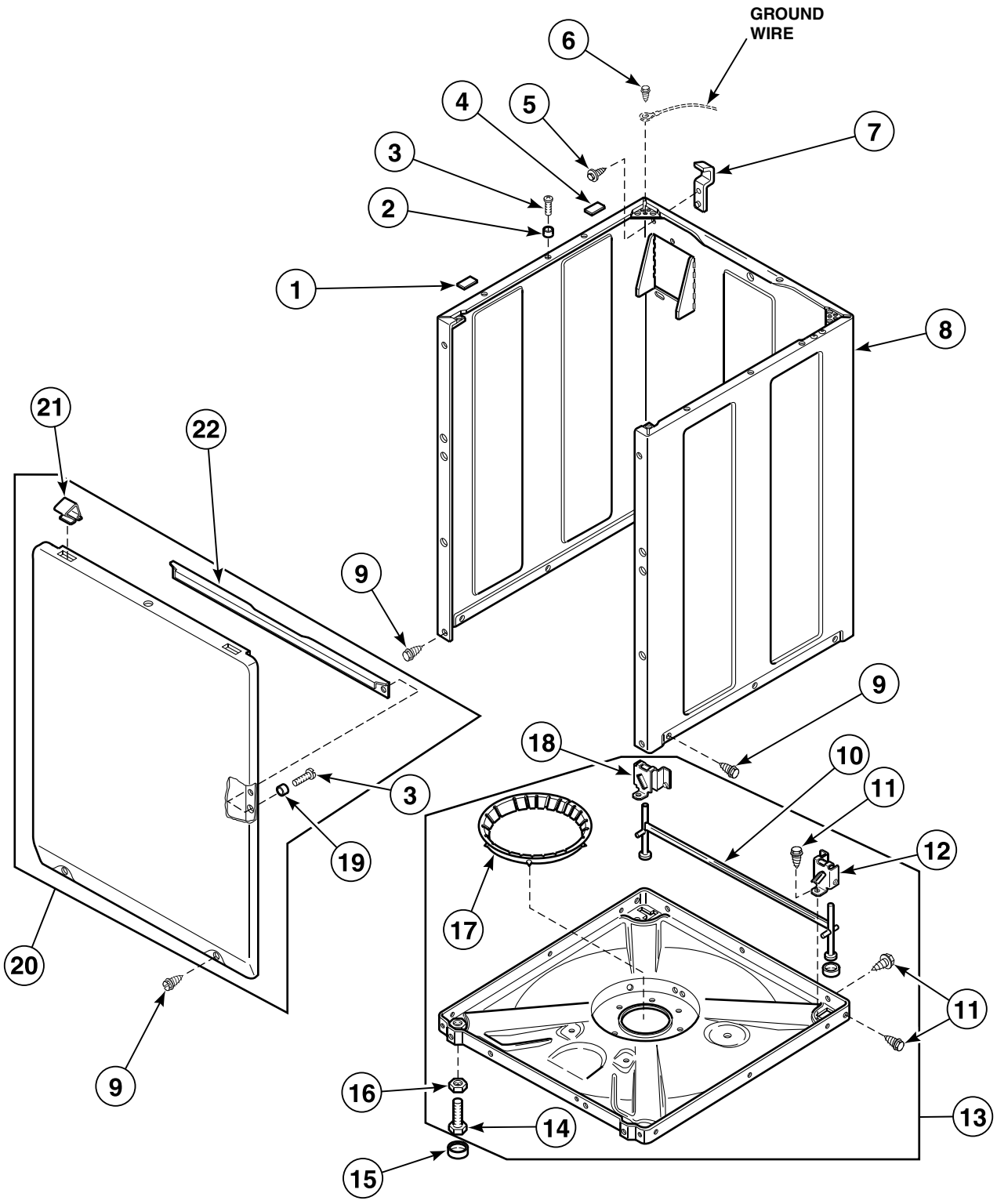

W184PZ3B_36418

© Copyright, Alliance Laundry Systems LLC – DO NOT COPY or TRANSMIT

Front Panel, Base Assembly and Cabinet Assembly

REF	PART NO.	DESCRIPTION	COMMENTS
1	56128	Bumper Pad	Thin
2	56079	Panel Locator	
3	39733	Screw	
4	36226	Bumper Pad	Thick
5	51780	Screw	
6	23962	Screw	
7	27103	Hold-Down Lug Hinge	
8	38612*P	Service Cabinet Kit	
9	27196	Screw	Slotted Hex Head
	35527	Screw	Torx Head; Optional, for added security of front panel; Refer to *Special Tools* section for Torx Bit and Holder
10	34443	Leg and Stabilizer Assembly	
11	35148	Screw	
12	36036	Bracket	Right
13	34434P	Base Kit	Through Serial No. 9502022146; Includes Items 10, 11, 12, 14, 16, 17 and 18
	36599P	Base Kit	Starting Serial No. 9502022147; Includes Items 10, 11, 12, 14, 16, 17 and 18
14	34319	Leveling Leg	
15	34318	Rubber Foot	
16	21899	Nut	
17	36108	Snubber Pad Assembly	
18	36037	Bracket	Left
19	28102	Panel Locator	
20	34656*P	Front Panel Assembly	Includes Items 21, 22 and attaching hardware
21	35865	Hold-Down Clip	
22	35097	Front Panel Brace	

*** Add Letter To Designate Color. L - Almond W - White**

© Copyright, Alliance Laundry Systems LLC – DO NOT COPY or TRANSMIT

Mixing Valve and Motor Connection Blocks, Terminals and Terminal Extractor Tool

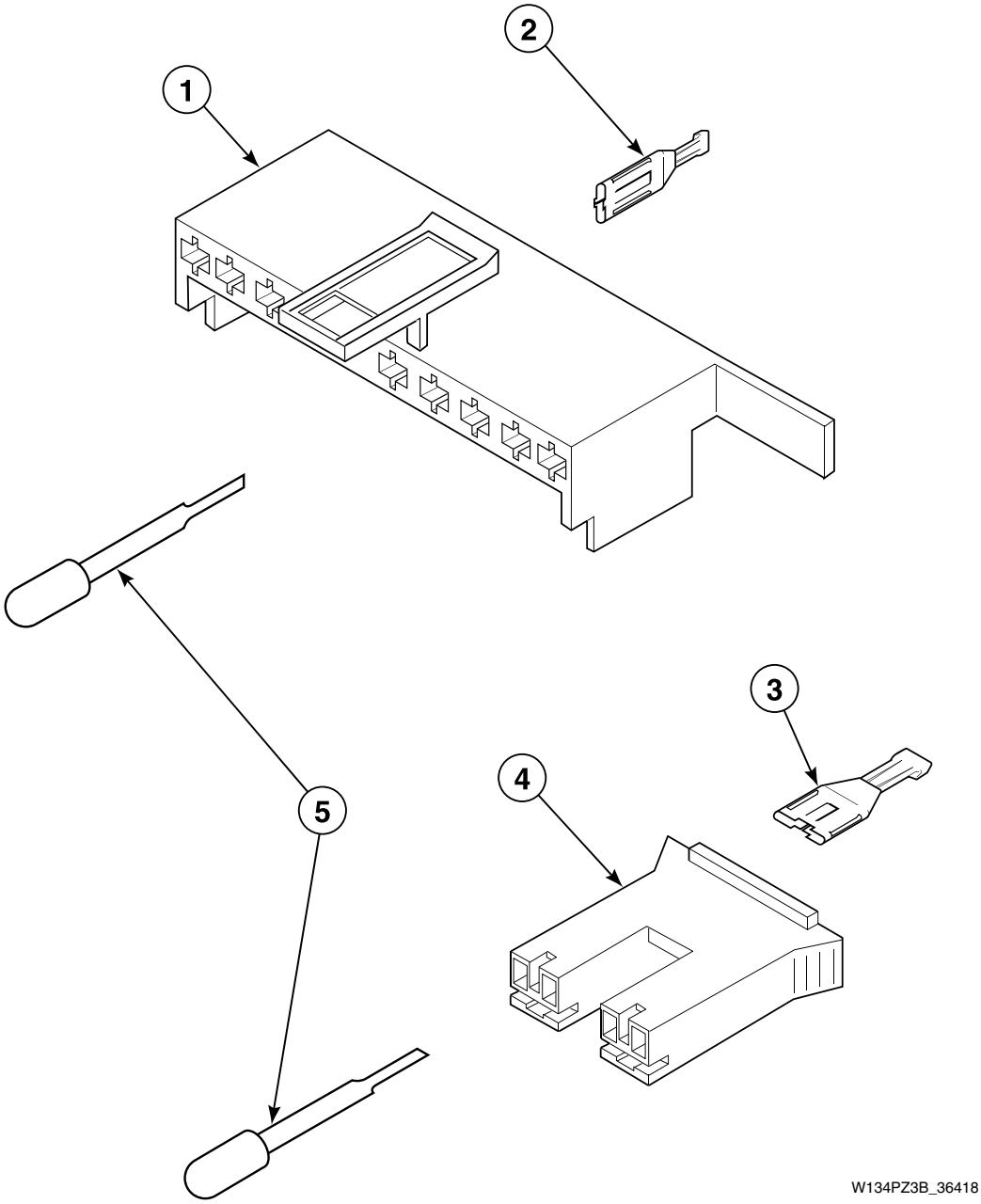

© Copyright, Alliance Laundry Systems LLC – DO NOT COPY or TRANSMIT

Mixing Valve and Motor Connection Blocks, Terminals and Terminal Extractor Tool

REF	PART NO.	DESCRIPTION	COMMENTS
1	34677	10 Circuit Plug	Motor
2	00188	Female Terminal	For One or Two Wire Application
3	00121	Female Spade Terminal	1/4 Inch
4	34675	Mixing Valve Plug	Natural
	34676	Mixing Valve Plug	Red
5	283P4	Terminal Extractor Tool	

© Copyright, Alliance Laundry Systems LLC – DO NOT COPY or TRANSMIT

Power Cord and Terminals

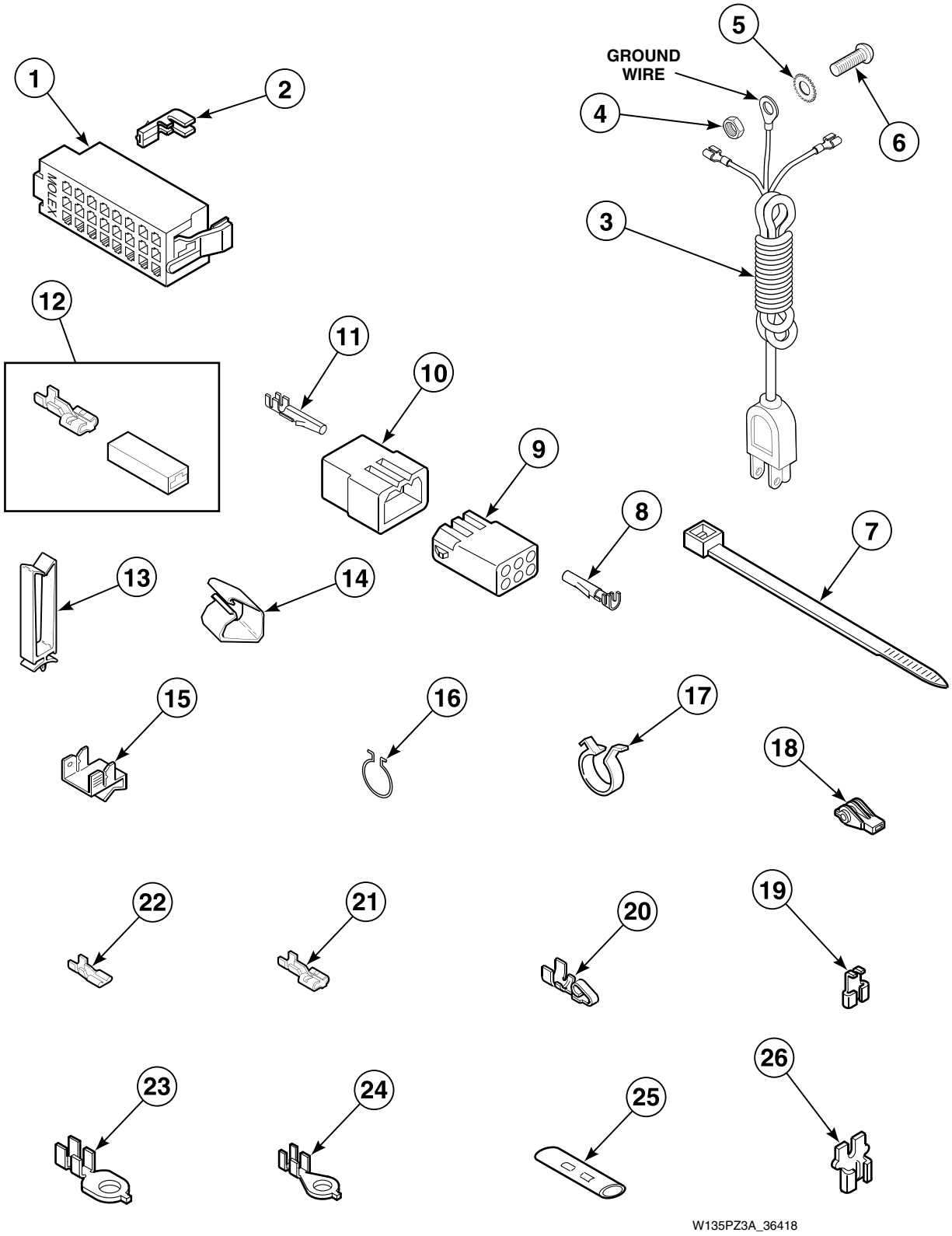

© Copyright, Alliance Laundry Systems LLC – DO NOT COPY or TRANSMIT

Power Cord and Terminals

REF	PART NO.	DESCRIPTION	COMMENTS
1	32746	24 Position Housing	Right; Black
	34123	24 Position Housing	Left; White
2	00188	Female Terminal	Used for One or Two Wire Application
3	38363	Lead-In Cord	Models AWM392*-3088, AWM392*23088 and EA2010*A3088
	34458	Lead-In Cord	All other models
4	03673	Nut	
5	21735	Washer	
6	20267	Screw	
7	55881	Harness Strap	
8	00117	Female Pin Terminal	
9	26301	1 Circuit Receptacle	
	26708	6 Circuit Receptacle	
	26163	9 Circuit Receptacle	
10	26302	1 Circuit Plug	
	23041	6 Circuit Plug	
	23033	9 Circuit Plug	
11	00116	Male Pin Terminal	
12	00359	Insulated Female Spade Terminal	
13	36274	Wire Clip	
14	N/A	Harness Clip	
15	00161	Grounding Clip	
16	51291	Wire Clip	
17	504034	Wire Clip	
18	70210	Insulator	
19	00120	Female Flag Terminal	
20	N/A	Spade Terminal	Female; 1/4 inch
21	00223	Female Spade Terminal	Large Spade
22	00112	Female Spade Terminal	Small Spade
23	00113	Ring Terminal	1/4 inch Ring
24	00110	Ring Terminal	Small Shank
25	21091	Connector	
26	29673	Terminal Adapter	

*** Add Letter To Designate Color. L - Almond W - White**

N/A = Part no longer available

© Copyright, Alliance Laundry Systems LLC – DO NOT COPY or TRANSMIT

Special Tools (Drawing 1 of 2)

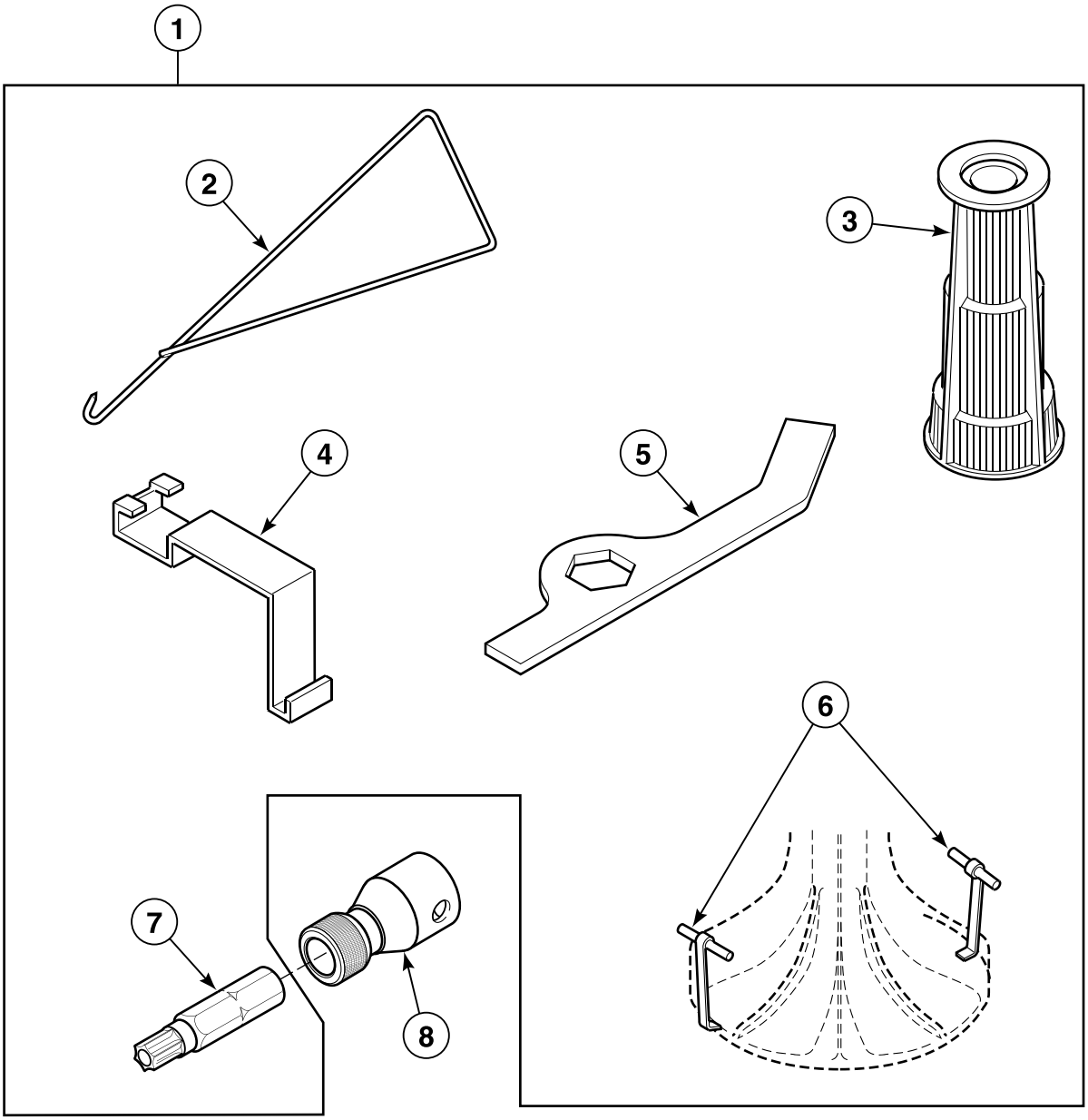

TLW1649P_36418

© Copyright, Alliance Laundry Systems LLC – DO NOT COPY or TRANSMIT

Special Tools (Drawing 1 of 2)

REF	PART NO.	DESCRIPTION	COMMENTS
1	725P3	Tool Kit	Includes items 2-7
2	321P4	Spring Hook Tool	For removal of centering springs from outer tub
3	293P4	Drive Bell Seal Tool	For installation of 36425 Bell and Transmission Tube Seal
4	273P4	Tub Cover Removal Tool	Use to remove 36025P Tub Cover Kit and install 32857 Tub Cover Gasket
5	306P4	Hex Wrench Tool	For removal of locknut from washtub hub
6	254P4P	Agitator Hook	Use to remove agitator from drive bell; Set of 2
7	281P4	Torx Bit	For removal and installation of control hood security screws
	282P4	Torx Bit	For removal and installation of pump and front panel attaching screws
8	24161	Bit Holder	3/8-inch drive

© Copyright, Alliance Laundry Systems LLC – DO NOT COPY or TRANSMIT

Special Tools (Drawing 2 of 2)

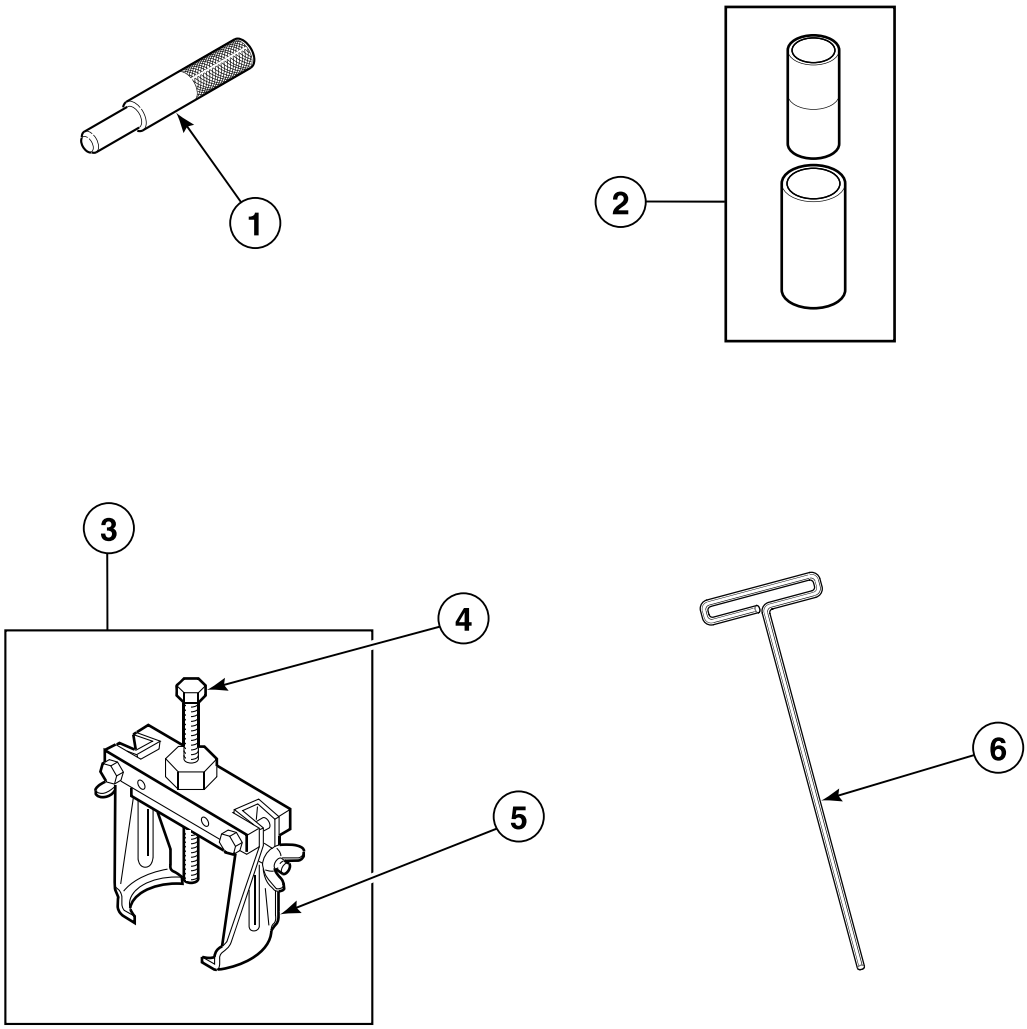

TLW1663P_36418

© Copyright, Alliance Laundry Systems LLC – DO NOT COPY or TRANSMIT

Special Tools (Drawing 2 of 2)

REF	PART NO.	DESCRIPTION	COMMENTS
1	305P4	Transmission Pin Tool	Use pin tools in place of dowel pins when reassembling transmission cover and case; 2 required
2	242P4	Spring Installer	For installing brake spring
3	294P4	Agitator Drive Bell Puller	Replaces 253P4 Bell Puller; For removal and installation of drive bell to transmission shaft
4	294P4B	Bolt	To update 253P4 Bell Puller
5	294P4A	Drive Bell Puller Arm	To update 253P4 Bell Puller
6	291P4	T-Handle Allen Wrench	For removal and installation of 3 pump assembly attaching screws

© Copyright, Alliance Laundry Systems LLC – DO NOT COPY or TRANSMIT

Wire Harnesses and Wires

PART NO.	DESCRIPTION	COMMENTS
36278P	Base Wire Harness Assembly	
33804	Wire Harness Assembly	Model EA2010*A3088
34833	Hood Wire Harness Assembly	Models AWM593*299F5 and AWM593*299F7
N/A	Hood Harness	Models AWG200*, AWG200*2, AWG202* and AWG204*2
34971P	Hood Wire Harness Assembly	All other models
39811	Timer Wire Harness Assembly	Model EA2010*A3088
45001	18 Gauge Wire	Black; Order wire by foot and terminals and connectors as required
45380	12 Gauge Wire	Orange; Order wire by foot and terminals and connectors as required

*** Add Letter To Designate Color. L - Almond W - White**

N/A = Part no longer available

NOTE: Individual wires not serviced separately. Order complete wire harness. When applying terminals to wires, it is recommended that the terminals be soldered to the wires.

© Copyright, Alliance Laundry Systems LLC – DO NOT COPY or TRANSMIT

Parts Index

A

Actuator Arm
33441 19
Agitator
33174 25
33513 25
33514 25
Agitator Cap
36515 25
Agitator Drive Bell Puller
294P4 45
Agitator Hook
254P4P 43
Agitator Pinion
27003 31
Anti-Seize Compound
27604P 29

B

Backflow Preventer
34500 21
Balance Ring Assembly
34731 29
Base Kit
34434P 37
36599P 37
Base Wire Harness Assembly
36278P 46
Bearing Housing Assembly
27182 29
35746 35
Bell and Transmission Tube Seal
36425 25
Bell Plug
36511 25
Belt
28808 23
35517 23
Bit Holder
24161 43
Bleach Dispenser
34776 15
Bolt
02505 5
294P4B 45
Bracket
36036 37
36037 37
Brake Kit
38505P 35
Brake Pad Kit
548P3 35
Bumper
21685 ..... 15, 17
Bumper Pad
36226 37
56128 37
Bushing
33446 15

C

Cable Clip
21036 27
Capacitor Kit
258P3 23
Clothes Guard
35035 25
Connector
21091 41
Control Hood
37075* 7
Control Panel and Bracket Assembly
36521*P 7
Control Panel Bumper
32648 7

D

Director Bracket
36034 ..... 15, 17
Disconnect Power Warning Label
505281 ..... 15, 17
Dowel Pin
27172 31
Drain Extension Kit
451P3 33
Drain Hose
39950 33
Drain Hose Sleeve
33615 33
Drive Bell and Seal Kit
39508P 25
Drive Bell Puller Arm
294P4A 45
Drive Bell Seal Tool
293P4 43
Drive Pinion
36562P 31

E

End Cap
31248 ..... 11, 13
31249 ..... 11, 13
34459 9
34460 9

F

Fabric Softener Dispenser Assembly
33510 25
36542 25

N/A items do not appear in index.

© Copyright, Alliance Laundry Systems LLC – DO NOT COPY or TRANSMIT

Female Flag Terminal
00120 41
Female Pin Terminal
00117 41
Female Spade Terminal
00112 41
00121 39
00223 41
Female Terminal
00188 ..... 39, 41
Fill Hose
37380 21
37381 21
Fill Hose Kit
28330P 21
38349P 21
Flinger
27187 29
Front Panel Assembly
34656*P 37
Front Panel Brace
35097 37

G

Gear and Stud Assembly
26577 31
Graphic Overlay
32460 7
Graphic Panel
35235 11
36620 11
37933 9
Grommet
29175 27
Grounding Clip
00161 41

H

Harness Strap
55881 41
Helix
27018 35
Hex Wrench Tool
306P4 43
Hinge Bushing
36474 17
Hinge Gasket
34338 ..... 15, 17
Hinge Stop Clip
36519 15
Hold-Down Clip
35865 37
Hold-Down Lug Hinge
27103 37
Hood and Mounting Bracket Assembly
31811 ..... 9, 11
Hood Back Panel
37782 15
38267 7
Hood Wire Harness Assembly
34833 46
34971P 46
Hose Clamp
29210 21
36801 21
36802 33
39282 27
Hose Support
35487 33
36522 33
Housing, 24 Position
32746 41
34123 41
Hub and Seal Kit
495P3 25

I

Idler Lever
31054 23
37443 23
Idler Lever Helper Spring
30620 23
Idler Lever Spring
37606 23
Idler Pulley
28800P 23
Idler Shaft
28802P 23
Idler Spring
37366 23
Input Shaft
34853P 31
Insulated Female Spade Terminal
00359 41
Insulator
70210 41

K

Knob Assembly
33610 ..... 9, 11, 13

L

Lead-In Cord
34458 41
38363 41
Leg and Stabilizer Assembly
34443 37
Leg Plate
27926 27
Leg Spring
35948 27
Leveling Leg
34319 37
Lid
201460*P 17
33541*P 15

N/A items do not appear in index.

© Copyright, Alliance Laundry Systems LLC – DO NOT COPY or TRANSMIT

Lid Hinge
36437 ..... 15, 17
36438 ..... 15, 17
36513 15
Lid Plug
34153 17
Light
32519 7
Lint Filter
39371 25

M

Male Pin Terminal
00116 41
Mixing Valve
34963P 21
34997P 21
Mixing Valve Mounting Bracket
39407 21
Mixing Valve Plug
34675 39
34676 39
Mixing Valve-to-Tub Cover Hose
38155 21
Motor Assembly
35030P 23
36256P 23
Motor Bracket and Idler Lever Kit
37415P 23
Motor Kit
201615P 23
38036P 23
Motor Mount
34788 23
Motor Mount Post
34791 23
Motor Shield
34754 23
Motor Switch
35632 23

N

Nut
03673 41
20275 5
21899 37
24205 7
27222 ..... 17, 29
28803 23
29220 25
35423 23
36020 17
52566 ..... 5, 7, 23
57584 ..... 9, 11

O

O-Ring
36472 25
Outer Tub Assembly
34438P 27
Outer Tub Kit
34439P 27
Output Shaft
36570P 31

P

Panel Locator
28102 37
56079 37
Pivot Dome
34470 35
Plug, 1 Circuit
26302 41
Plug, 10 Circuit
34677 39
Plug, 6 Circuit
23041 41
Plug, 9 Circuit
23033 41
Pressure Bulb
30907 27
Pressure Switch
201927P 13
35889P 7
39035P 9, 11
Pulley Assembly
34921 35
34923 35
35308 35
35310 35
Pump
201566P 23
Push-to-Start Sticker
53738 5

R

Rack
201664 31
Receptacle, 1 Circuit
26301 41
Receptacle, 6 Circuit
26708 41
Receptacle, 9 Circuit
26163 41
Reduction Gear
29161P 31
Retainer Clip
36014 33
Retaining Ring
23748 23
27197 31
Ring Terminal
00110 41
00113 41
Rubber Foot
34318 37

N/A items do not appear in index.

© Copyright, Alliance Laundry Systems LLC – DO NOT COPY or TRANSMIT

S

Screw
- M400057 29
- 02916 ..... 5, 7
- 20267 41
- 23008 17
- 23222 7
- 23962 ..... 5, 7, 9, 11, 13, 15, 19, 21, 37
- 27030 31
- 27196 37
- 27202 25
- 27220 35
- 27229 23
- 27328 5
- 29273 31
- 31260 ..... 9, 11, 13
- 31752 ..... 9, 11, 13
- 32814 31
- 33562 ..... 15, 21
- 34337 ..... 15, 17
- 34565 23
- 35148 37
- 35369 ..... 27, 35
- 35527 37
- 35528 7
- 36510 19
- 36639 23
- 39432 25
- 39733 37
- 500226 7
- 503661 23
- 503673 17
- 51778 5
- 51780 37
- 52909 ..... 15, 17
- 80399 5

Service Cabinet Kit
- 38612*P 37

Silicone Grease
- 26594P 35

Siphon Break Kit
- 562P3 33

Slide
- 26493 31

Snubber Pad Assembly
- 36108 37

Spline Insert
- 29728 25

Spring
- 33435 35
- 33443 19

Spring Clip
- 28849 23

Spring Hook Tool
- 321P4 43

Spring Installer
- 242P4 45

Standpipe Adapter
- 36878 33

Standpipe Strap
- 33489 33

Strain Relief
- 32219 33
- 38384 ..... 15, 17

Support Barrel
- 56534 ..... 15, 17

Support Leg
- 34792 35

Switch
- 27761 7
- 33445 19

Switch Holder Clip
- 33433 19

Switch Holder Kit
- 36497P 19

Switch Knob
- 39897 7

T

Temperature Switch
- 21300 ..... 9, 11
- 35115 ..... 9, 11
- 36335 ..... 9, 13

Terminal Adapter
- 29673 41

Terminal Extractor Tool
- 283P4 39

T-Handle Allen Wrench
- 291P4 45

Timer
- 28719P 5
- 31239P 9
- 31241P 11
- 31243P 11
- 36608P 13

Timer Case Assembly
- 37733W 5

Timer Knob
- 33897 ..... 9, 11, 13

Timer Knob Assembly
- 26256 5

Timer Plate
- 31864W 5

Timer Skirt Assembly
- 33817 ..... 9, 11, 13

Timer Wire Harness Assembly
- 39811 46

Tool Kit
- 725P3 43

Top Assembly
- 34902*P 15
- 36273*P 17

Torx Bit
- 281P4 43
- 282P4 43

Transmission Assembly
- 34526P 29

Transmission Case Assembly
- 33223P 31

Transmission Cover Assembly
- 38290P 31

Transmission Oil
- 27243P 31

Transmission Pin Tool
- 305P4 45

N/A items do not appear in index.

© Copyright, Alliance Laundry Systems LLC – DO NOT COPY or TRANSMIT

Transmission Sealant
37577P 31
Trim
33123R 13
Tub Assembly
39240P 25
39252P 25
Tub Cover Gasket
32857 27
Tub Cover Kit
36025P 27
Tub Cover Removal Tool
273P4 43
Tub Spring
35947 27
Tubing
39124 27
39125 27
Tub-to-Pump Hose
35752 33
35753 33

U

Unbalanced Load Lever
33442 19
Upper or Lower Bearing
28944RP 35

W

Warning Label
500049 27
Washer
M400017 ..... 5, 7
02431 ..... 5, 7
20290 21
21456 ..... 5, 31
21734 5
21735 41
23225 5
26509 ..... 31, 35
27015 35
28094 25
29260 31
29443 23
30627 5
35092 31
35535 35
52549 23
81392 23
91176 7
Washtub Gasket
39122 25
Washtub Kit
719P3 25
Water Temperature Switch
32189 9
Wire Clip
36274 41
504034 41
51291 41
Wire Harness Assembly
33804 46
Wire, 12 Gauge
45380 46
Wire, 18 Gauge
45001 46

N/A items do not appear in index.

© Copyright, Alliance Laundry Systems LLC – DO NOT COPY or TRANSMIT

Notes

© Copyright, Alliance Laundry Systems LLC – DO NOT COPY or TRANSMIT